XRT59L91

Single-Chip E1
Line Interface Unit

October 1999-1

FEATURES

- Complete E1 (CEPT) line interface unit (Transmitter and Receiver)
- Generates transmit output pulses that are compliant with the ITU-T G.703 Pulse Template for 2.048Mbps (E1) rates
- On-Chip Pulse Shaping for both 75Ω and 120Ω Line Drivers
- Receiver can either be transformer or capacitively-coupled to the line
- Detects and Clears LOS (Loss of Signal) per ITU-T G.775
- Compliant with the ITU-T G.823 Jitter Tolerance Requirements
- Compliant with the ITU-T G.703 EOS Over-voltage protection requirements
- Supports both Local- and Remote-Loop back Operations
- Logic Inputs accept either 3.3V or 5.0V levels
- Operates over the Industrial Temperature Range
- Ultra Low Power Dissipation
- +3.3V Supply Operation

APPLICATIONS

- PDH Multiplexers
- SDH Multiplexers
- Digital Cross-Connect Systems
- DECT (Digital European Cordless Telephone) Base Stations
- CSU/DSU Equipment.
- Test Equipment

The product (or products) mentioned in this data sheet are no longer being manufactured and may not be ordered (OBS)

GENERAL DESCRIPTION

The XRT59L91 is an optimized single-chip analog E1 line interface unit (LIU) fabricated using low power, 3.3V CMOS technology. The LIU IC consists of both a Transmitter and a Receiver function. The Transmitter accepts a TTL or CMOS level signal from the Terminal Equipment; and outputs this data to the line via bipolar pulses that are compliant to the ITU-T G.703 pulse template for E1. The Receiver accepts an attenuated bipolar line signal (from the remote terminal equipment) and outputs this data to the (near-end) terminal equipment via CMOS level signals.

The receiver input can be transformer or capacitively-coupled to the line. The receiver input is transformer-coupled to the line using the 2:1 step-down transformer. The transmitter is coupled to the line using a 1:2 step-up transformer. This same configuration is applicable for both balanced (120Ω) and unbalanced (75Ω) interfaces.

ORDERING INFORMATION

Part No.	Package	Operating Temperature Range
XRT59L91ID	16 LD JEDEC SOIC (300 mil)	-40°C to +85°C

EXAR Corporation, 48720 Kato Road, Fremont, CA 94538 • (510) 668-7000 • FAX (510) 668-7017

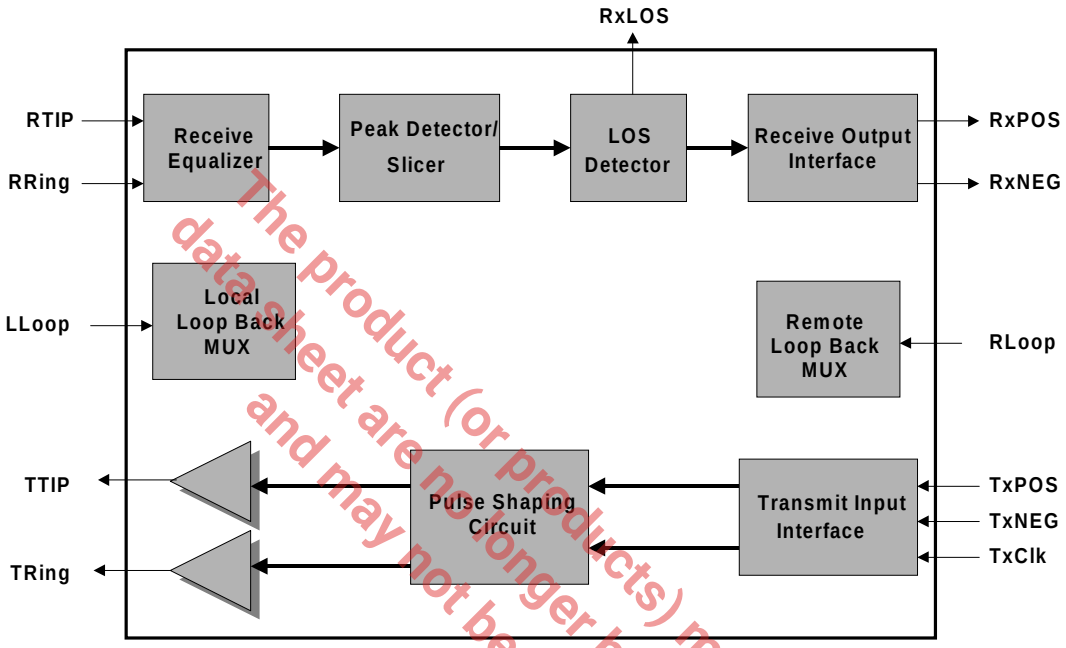

Figure 1. XRT59L91 Block Diagram

The product (or products) mentioned in this data sheet are no longer being manufactured and may not be ordered (OBS)

PIN CONFIGURATION

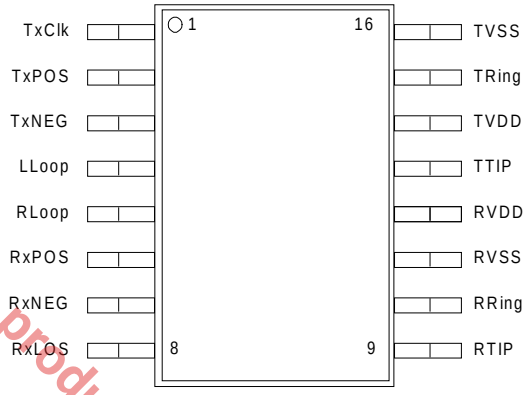

The product (or products) mentioned in this data sheet are no longer being manufactured and may not be ordered (OBS)

PIN DESCRIPTION

Pin#	Symbol	Type	Description
1	TxClk	I	**Transmitter Clock Input:** If the user operates the LIU in the "clocked" mode, then the "Transmit Section" of the LIU will use the falling edge of this signal to sample the data at the TxPOS and TxNEG input pins. ***Note:*** *If the user operates the LIU in the "clockless" mode, then the Terminal Equipment should not apply a clock signal to this input pin.*
2	TxPOS	I	**Transmit – Positive Data Input:** The exact signal that should be applied to this input pin depends upon whether the user intends to operate the "Transmit Section" (of the device) in the "Clocked" or "Clockless" Mode. **Clocked Mode -** The Terminal Equipment should apply bit-wide NRZ pulses on this input pin, whenever the Terminal Equipment needs to transmit a "positive-polarity" pulse onto the line via TTIP and TRing output pins. The XRT59L91 device will sample this input pin upon the falling edge of the TCLK signal. **Clockless Mode -** The Terminal Equipment should apply RZ pulses to this input pin, anytime the Terminal Equipment needs to transmit a "positive-polarity" pulse onto the line via TTIP and TRing output pins.

PIN DESCRIPTION

Pin#	Symbol	Type	Description
3	TxNEG	I	**Transmit – Negative Data Input:** The exact signal that should be applied to this input pin depends upon whether the user intends to operate the "Transmit Section" (of the device) in the "Clocked" or "Clockless" Mode. **Clocked Mode -** The Terminal Equipment should apply bit-wide NRZ pulses on this input pin, whenever the Terminal Equipment needs to transmit a "negative-polarity" pulse onto the line via TTIP and TRing output pins. The XRT59L91 device will sample this input pin upon the falling edge of the TClk signal. **Clockless Mode -** The Terminal Equipment should apply RZ pulses to this input pin, anytime the Terminal Equipment needs to transmit a "negative-polarity" pulse onto the line via TTIP and TRing output pins.
4	LLoop	I	**Local Loopback Input Select:** This input pin permits the user to configure the XRT59L91 device to operate in the "Local Loopback" Mode; in order to support Diagnostic Operations. When the XRT59L91 device is operating in the Local Loopback Mode, then TTIP and TRing output signals will be (internally) routed to RTIP and RRing input signals. Setting this input pin "high" configures the XRT59L91 device to operate in the "Local Loopback" Mode. Setting this input pin "low" configures the XRT59L91 device to operate in the "Normal" Mode. ***Note:*** *Pulling both the "LLoop" and "RLoop" input pins to VDD, simultaneously, will cause the XRT59L91 device to operate in the "In-Circuit Test" Mode. In this mode, all output pins will be tri-stated.*
5	RLoop	I	**Remote Loopback Input Select:** This input pin permits the user to configure the XRT59L91 device to operate in the "Remote Loopback" Mode; in order to support Diagnostic Operations. When the XRT59L91 device is operating in the Remote Loopback Mode, then the RxPOS and RxNEG output pins will be (internally) routed to the TxPOS and TxNEG input pins. Setting this input pin "high" configures the XRT59L91 device to operate in the "Remote Loopback" Mode. Setting this input pin "low" configures the XRT59L91 device to operate in the "Normal" Mode. ***Note:*** *Pulling both the "LLoop" and "RLoop" input pins to VDD, simultaneously, will cause the XRT59L91 device to operate in the "In-Circuit Test" Mode. In this mode, all output pins will be tri-stated.*

The product(s) mentioned in this data sheet are no longer being manufactured and may not be ordered (OBS)

PIN DESCRIPTION

Pin#	Symbol	Type	Description
6	RxPOS	O	**Receive Positive Pulse Output:** This output pin will pulse “high” whenever the XRT59L91 device has received a “Positive Polarity” pulse, in the incoming line signal, at RTIP/RRing inputs.
7	RxNEG	O	**Receive Negative Pulse Output:** This output pin will pulse “high” whenever the XRT59L91 device has received a “Negative Polarity” pulse, in the incoming line signal, at RTIP/RRing inputs.
8	RxLOS	O	**Receive Loss of Signal Output Indicator:** This output pin toggles “high” if the XRT59L91 device has detected a “Loss of Signal” condition in the incoming line signal.
9	RTIP	I	**Receive TIP Input:** This input pin, along with RRing is used to receive the bipolar line signal from the “Remote E1 Terminal”.
10	RRing	I	**Receive Ring Input:** This input pin, along with RTIP is used to receive the bipolar line signal from the “Remote E1 Terminal”.
11	RVSS	-	**Receiver Ground Pin**
12	RVDD	-	**Receiver Power Supply Pin:** 3.3V $\pm$ 5%
13	TTIP	O	**Transmit TIP Output:** The XRT59L91 device will use this pin, along with TRing, to transmit a bipolar line signal, via a 1:2 step-up transformer.
14	TVDD	-	**Transmitter Power Supply Pin:** 3.3V $\pm$ 5%
15	TRing	O	**Transmit Ring Output:** The XRT59L91 device will use this pin, along with TTIP, to transmit a bipolar line signal, via a 1:2 step-up transformer.
16	TVSS	-	**Transmitter Ground Pin**

The product (or product(s) mentioned in this data sheet are no longer being manufactured and may not be ordered (OBS)

AC ELECTRICAL CHARACTERISTICS 25°C

Unless otherwise specified: T_A= V_{DD}=3.3V±5%, unless otherwise specified.

Parameter	Symbol	Min	Typ	Max	Unit
TClk Clock Period	T1	-	488	-	ns
TClk Duty Cycle	T2	47	50	53	%
Transmit Data Setup Time	TSU	50	-	-	ns
Transmit Data Hold Time	THO	30	-	-	ns
Transmit Data Prop. Delay Time	T3				
- RZ data Mode		-	50	-	ns
- NRZ data Mode (clock mode)		-	50	-	ns
TClk Rise Time(10%/90%)	TR	-	-	40	ns
TClk Fall Time(90%/10%)	TF	-	-	40	ns
Receive Data Rise Time	Rtr	-	-	40	ns
Receive Data Fall Time	Rtf	-	-	40	ns
Receive Data Prop. Delay	Rpd	-	160	-	ns
Receive Data Pulse Width	Rxpw	210	244	450	ns

DC ELECTRICAL CHARACTERISTICS 25°C

Unless otherwise specified: T_A=-, V_{DD}=3.3V±5%, unless otherwise specified.

Parameter	Symbol	Min	Typ	Max	Unit
Power Supply Voltage	V_{DD}	3.13	3.3	3.46	V
Input High Voltage	V_{IH}	2.0	-	5.0	V
Input Low Voltage	V_{IL}	-0.5	-	0.8	V
Output High Voltage @ I_{OH} = -4mA	V_{OH}	2.4	-	-	V
Output Low Voltage @ I_{OL} = 4mA	V_{OL}	-	-	0.4	V
Input Leakage Current					
(except Input pins with pull-up resistor	I_L	-	-	± 10	µA
Input Capacitance	CI	-	5.0	-	pF
Output Load Capacitance	C_L	-	-	25	pF

Power Consumption including the line power dissipation, tranmission and receive paths all active

Unless otherwise specified: T_A=-40 to 85°C, V_{DD}=3.3V±5%, unless otherwise specified.

Parameter	Symbol	Min	Typ	Max	Unit	Conditions
Power Consumption	PC	-	130	145	mW	75Ω load, operating at 50% Mark Density
Power Consumption	PC	-	115	130	mW	120Ω load, operating at 50% Mark Density
Power Consumption	PC	-	170	185	mW	75Ω load, operating at 100% Mark Density
Power Consumption	PC	-	140	155	mW	120Ω load, operating at 100% Mark Density
Power Consumption	PC	-	25	30	mW	Transmitter in Powered-down mode

The product (or products) mentioned in this data sheet are no longer being manufactured and may not be ordered (OBS)

RECEIVER ELECTRICAL CHARACTERISTICS

T_A=-40 to 85°C, V_{DD}=3.3V±5%, unless otherwise specified.

Parameter	Min	Typ	Max	Unit	Test Conditions
Receiver Loss of Signal:					
Threshold to Assert	12	20	-	dB	Cable attenuation @ 1024KHz
Threshold to Clear	11	15		dB	
Time Delay	10	-	255	bit	per ITU-G.775
Hysteresis	-	5	-	dB	
Receiver Sensitivity	11	13	-	dB	Below nominal pulse amplitude of 3.0V for 120Ω and 2.37V for 75Ω applications. With -18dB interference signal added.
Interference Margin	-18	-14	-	dB	With 6dB cable loss
Input Impedance	-	5	-	KΩ	
Jitter Tolerance:					
20Hz	10				
700Hz	5	-	-	UIpp	
10KHz —100KHz	0.3				
Return Loss:					
51KHz —102KHz	14	-	-	dB	
102KHz—2048KHz	20	-	-	dB	per ITU-G.703
2048KHz—3072KHz	16	-	-	dB	

The product (or products) mentioned in this data sheet are no longer being manufactured and may not be ordered (OBS)

TRANSMITTER ELECTRICAL CHARACTERISTICS

T_A=-40 to 85°C, V_{DD}=3.3V±5%, unless otherwise specified.

Parameter	Min	Typ	Max	Unit	Test Conditions
AMI Output Pulse Amplitude:					
75Ω Application	2.13	2.37	2.60	V	Use transformer with 1:2 ratio and 9.1Ω resistor in series with each end of primary.
120Ω Application	2.70	3.00	3.30		
Output Pulse Width	224	244	264	ns	
Output Pulse Width Ratio	0.95	1.00	1.05	-	per ITU-G.703
Output Pulse Amplitude Ratio	0.95	1.00	1.05	-	per ITU-G.703
Output Return Loss:					
51KHz —102KHz	10	-	-	dB	
102KHz—2048KHz	16	-	-	dB	per ETSI 300 166 and CH PTT
2048KHz—3072KHz	12	-	-	dB	

ABSOLUTE MAXIMUM RATINGS

Storage Temperature . . . . . -65°C to + 150°C

Operating Temperature . . . . . -40°C to + 85°C

Supply Voltage . . . . . -0.5V to + 6.0V

SYSTEM DESCRIPTION

The XRT59L91 device is a single channel E1 transceiver that provides an electrical interface for 2.048Mbps applications. XRT59L91 includes a receive circuit that converts an ITU-T G.703 compliant bipolar signal into a TTL compatible logic levels. Each receiver also includes an LOS (Loss of Signal) detection circuit. Similarly, in the Transmit Direction, the Transmitter converts TTL compatible logic levels into a G.703 compatible bipolar signal. The Transmitter may be operated in either a "Clocked" or "Clockless" Mode.

The XRT59L91 device consists of both a Transmit Section and a Receive Section; each of these sections will be discussed in detail below.

1.0 The Transmit Section

In general, the purpose of the "Transmit Section" (within the XRT59L91 device) is to accept TTL/CMOS level digital data (from the Terminal Equipment), and to encode it into a format such that it can:

1. Be efficiently transmitted over coaxial- or twisted-pair cable at the E1 data rate; and
2. Be reliably received by the Remote Terminal Equipment at the other end of the E1 data link.
3. Comply with the ITU-T G.703 pulse template requirements, for E1 applications.

The circuitry that the Transmit Section (within the XRT59L91 device) uses to accomplish this goal is discussed below. The Transmit Section of the XRT59L91 device consists of the following blocks:

- Transmit Input Interface
- Pulse Shaping Block

1.1 The Transmit Input Interface

The Transmit Input Interface accepts either "clocked" or "clockless" data from the Terminal Equipment. The manner in which the Terminal Equipment should apply data to the XRT59L91 device depends upon whether the device is being operated in the "clocked" or "clockless" mode.

1.2.1 Operating the Transmitter in the Clocked Mode

The user can configure the XRT59L91 device to operate in the "Clocked" mode by simply applying a 2.048MHz clock signal to the "TxClk" input pin. The XRT59L91 device contains detectioncircuitry that sense activity on the "TxClk" line. If this circuit senses activity on the "TxClk" line, then the XRT59L91 will automatically be operating in the "Clocked" Mode.

In the Clocked Mode, a 2.048 mHz clock should be applied toTxClk input pin and NRZ data at the TxPOS and TxNEG input pins. The "Transmit Input Interface" circuit will sample the data, at the TxPOS and TxNEG input pins, upon the falling edge of TxClk, as illustrated below.

The product (or products) mentioned in this data sheet are no longer being manufactured and may not be ordered (OBS)

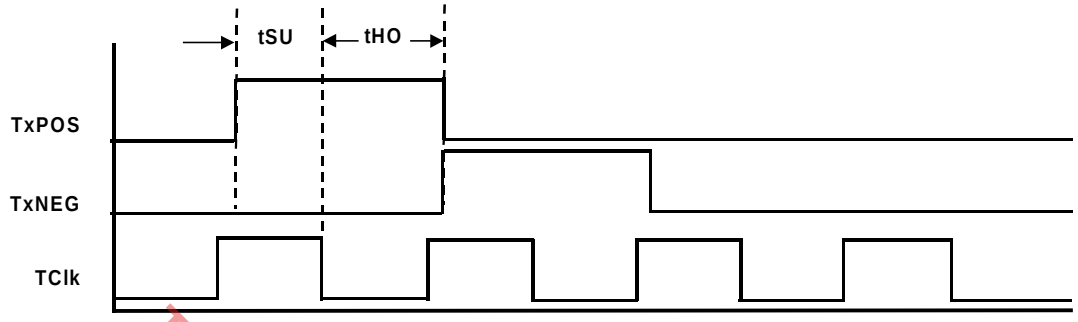

Figure 2. Illustration on how the XRT59L91 Device Samples the data on the TXPOS and TXNEG input pins

The product (s) mentioned in this data sheet are no longer being manufactured and may not be ordered (OBS)

In general, if the XRT59L91 device samples a "1" on the TxPOS input pin, then the "Transmit Section" of the device will ultimately generate a positive polarity pulse via the TTIP and TRing output pins (across a 1:2 transformer). Conversely, if the XRT59L91 device samples a "1" on the "TxNEG" input pin, then the "Transmit Section" of the device will ultimately generate a negative polarity pulse via the TTIP and TRing output pins (across a 1:2 transformer).

1.2.1 Operating the Transmitter in the "Clockless" Mode

The user can configure the XRT59L91 device to operate in the "Clockless" mode by doing the following:

- Not applying a clock signal to the TXClk input, and either pulling this pin to VDD or letting it float.
- By applying RZ (Return to Zero) data to the TxPOS and TxNEG input pins, as illustrated below.

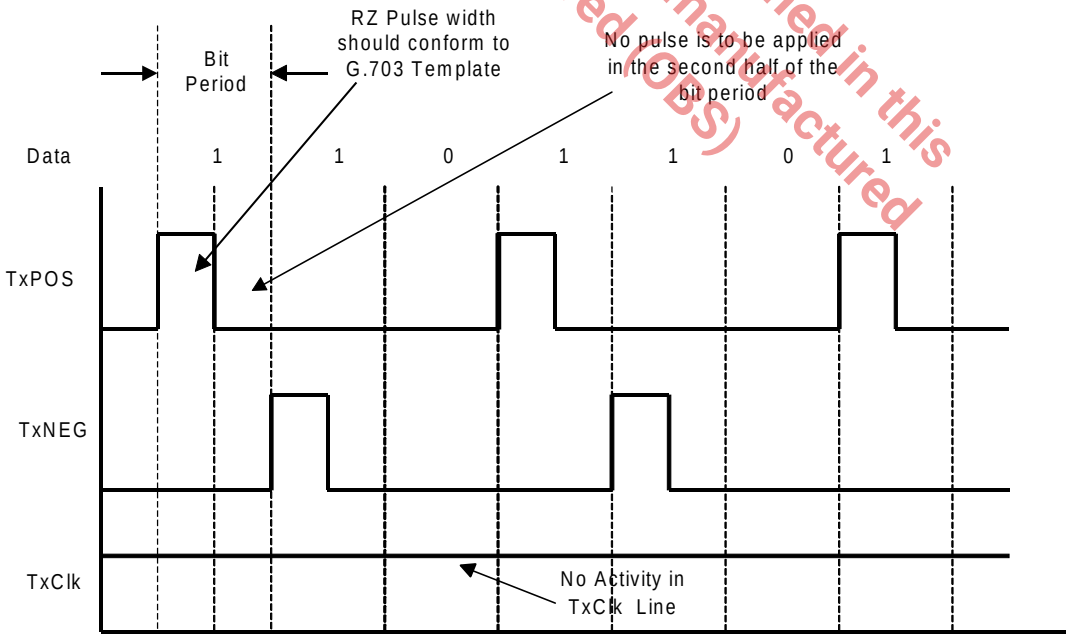

Figure 3. Illustration on how the Terminal Equipment should apply data to the "Transmit Section" of the XRT59L91 Device, when operating in the "Clockless" Mode

Figure 3, indicates that when the user is operating the XRT59L91 device in the "Clockless" Mode, then the Terminal Equipment must do the following.

- Not apply a signal on the "TxClk" line.
- When applying a pulse (to either the TxPOS or TxNEG input pin), apply an RZ pulse to the appropriate input pin. This RZ pulse should only have a width of one-half the bit-period. Addition, the RZ pulse should occupy only the first half of the bit-period. The TxPOS and TxNEG input pins must be at 0V, during the second half of every bit-period.

1.3 The Pulse Shaping Circuit

The purpose of the "Transmit Pulse Shaping" circuit is to generate "Transmit Output" pulses that comply with the ITU-T G.703 Pulse Template Requirements for E1 Applications.

An illustration of the "ITU-T G.703 Pulse Template Requirements" is presented below in Figure 4.

The product (or product(s) mentioned in this data sheet are no longer being manufactured and may not be ordered (OBS)

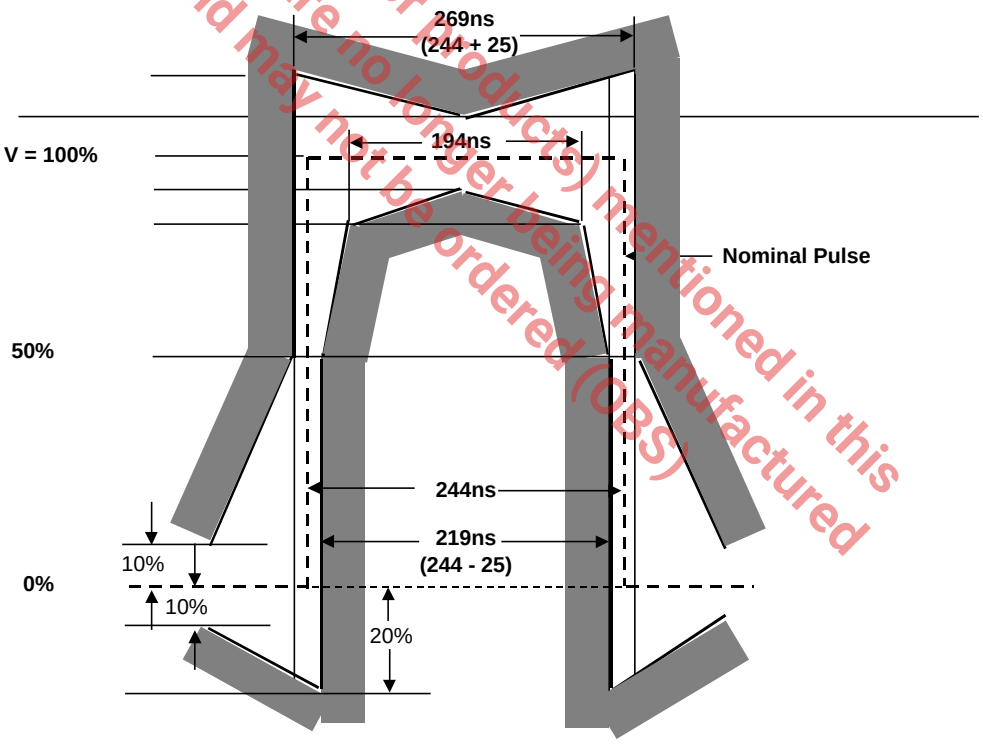

Figure 4. Illustration of the ITU-T G.703 Pulse Template for E1 Application

With input signal as described above, the XRT59L91 device will take each mark (which is provided to it via the "Transmit Input Interface" block, and will generate a pulse that complies with the pulse template, presented in Figure 4 (when measured on the secondary-side of the Transmit Output Transformer).

1.2 Interfacing the Transmit Section of the XRT59L91 device to the Line

ITU-T G.703 specifies that the E1 line signal can be transmitted over coaxial cable and terminated with 75Ω or transmitted over twisted-pair and terminated with 120Ω.

In both applications (e.g., 75Ω or 120Ω), the user is advised to interface the Transmitter to the Line, in the manner as depicted in Figures 5 and 6, respectively.

The product (or Products) mentioned in this data sheet are no longer being manufactured and may not be ordered (OBS)

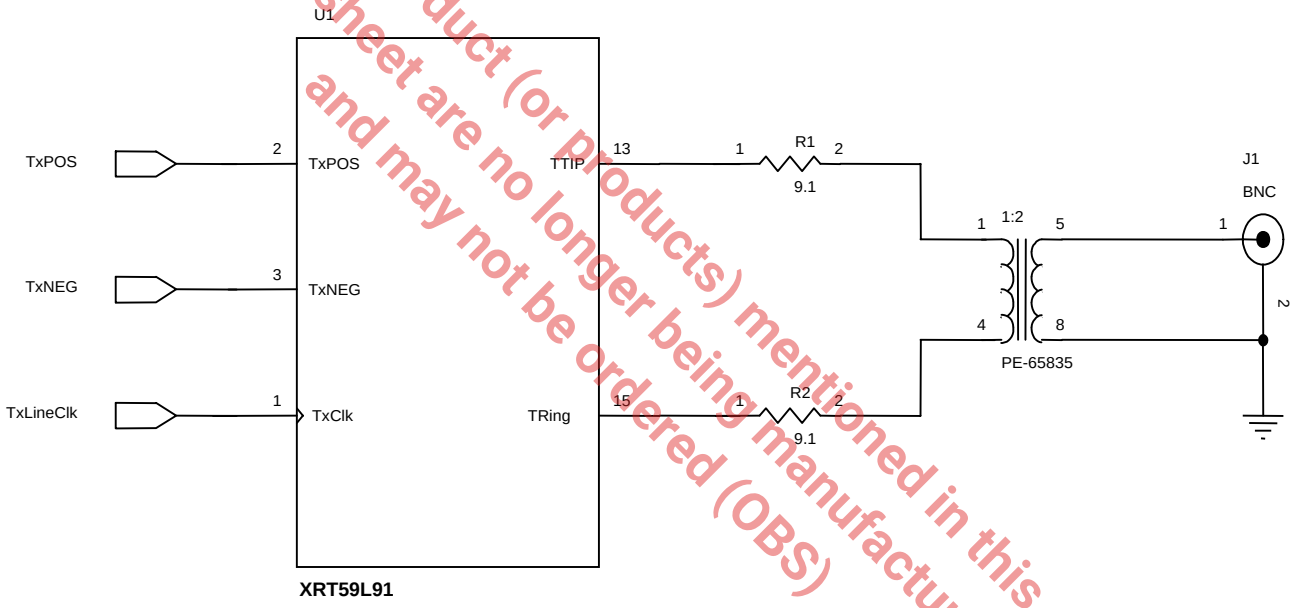

Figure 5. Illustration of how to interface the Transmit Section of the XRT59L91 device to the Line (for "75Ω" Applications)

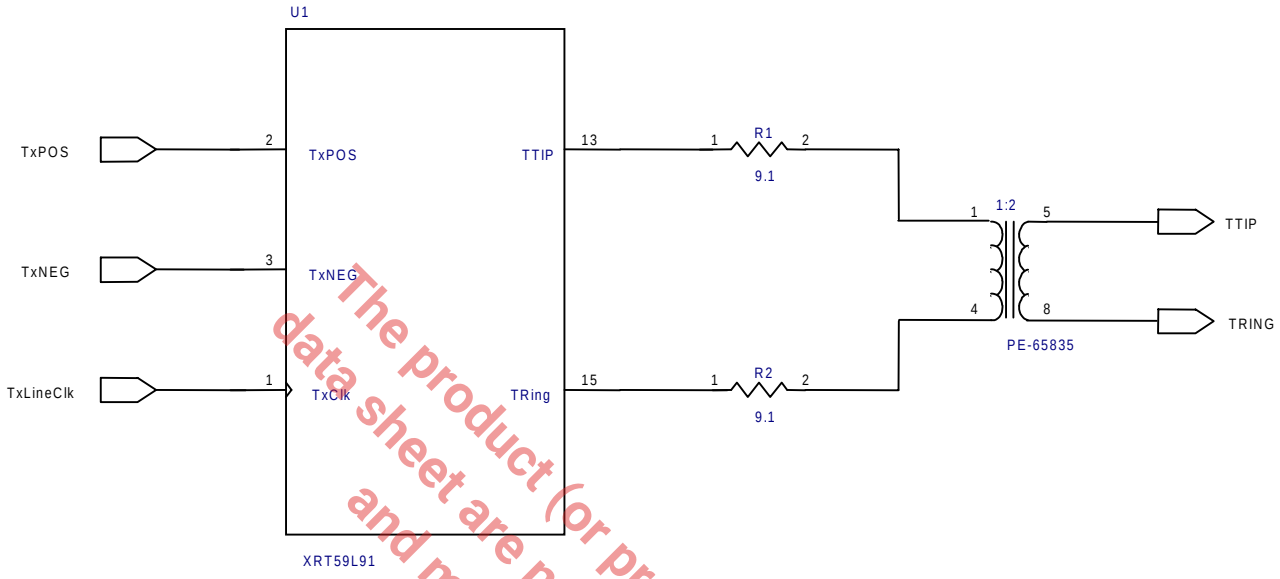

Figure 6. Illustration of how to interface the Transmit Section of the XRT59L91 device to the Line (for "120Ω" Applications)

The product (or products) mentioned in this data sheet are no longer being manufactured and may not be ordered (OBS)

Notes:

1. *Figures 5 and 6 indicate that for both "75Ω and "120Ω" applications, the user should connect a 9.1Ω resistor, in series, between the TTIP/TRing outputs and the transformers.*
2. *Figure 5 and 6 indicate that the user should a "1:2 STEP-UP" Transformer.*

Transmit Transformer Recommendations

Parameter	Value
Turns Ratio	1:2
Primary Inductance	
Isolation Voltage	
Leakage Inductance	

The Following Transformers Are Recommended For Use:

Part Number	Vendor	Isolation	Package Type
PE-65835	Pulse		
TTI 7154-R	Transpower Technologies, Inc.		
TG26-1205	HALO		

Note:
More transformers will be added to this list as we take the time to evaluate these transformers.

The product (or products) mentioned in this data sheet are no longer being manufactured and may not be ordered (OBS)

Magnetic Supplier Information

Pulse

Corporate Office
12220 World Trade Drive
San Diego, CA 92128
Tel: (619)-674-8100
FAX: (619)-674-8262

Europe
1 & 2 Huxley Road
The Surrey Research Park
Guildford, Surrey GU2 5RE
United Kingdom
Tel: 44-1483-401700
FAX: 44-1483-401701

Asia
150 Kampong Ampat
#07-01/02
KA Centre
Singapore 368324
Tel: 65-287-8998
FAX: 65-280-0080

Transpower Technologies

Corporate Office
9410 Prototype Drive, Ste #1
Reno, NV 89511
Tel: (800)511-7308 or
(775)852-0140
Fax: (775)852-0145
www.trans-power.com

HALO Electronics
HALO Electronics
P.O. Box 5826
Redwood City, CA 94063
Tel: (650)568-5800
FAX: (650)568-6161

2.0 The Receive Section

The Receive Section of the XRT59L91 device consists of the following blocks:

- The “Receive Equalizer” block
- The “Peak Detector” and “Slicer” block
- The “LOS Detector” block
- The “Receive Output Interface” block

2.1 Interfacing the Receive Section to the Line

The design of the XRT59L91 device permits the user to transformer-couple or capacitive-couple the Receive Section to the line. Additionally, as mentioned earlier, the specification documents for E1 specify 75Ω termination loads, when transmitting over coaxial cable, and 120Ω loads, when transmitting over twisted-pair. Figures 7 through 9 present the various methods that the user can employ in order to interface the Receiver (of the XRT59L91 device) to the line.

The product (or products) mentioned in this data sheet are no longer being manufactured and may not be ordered (OBS)

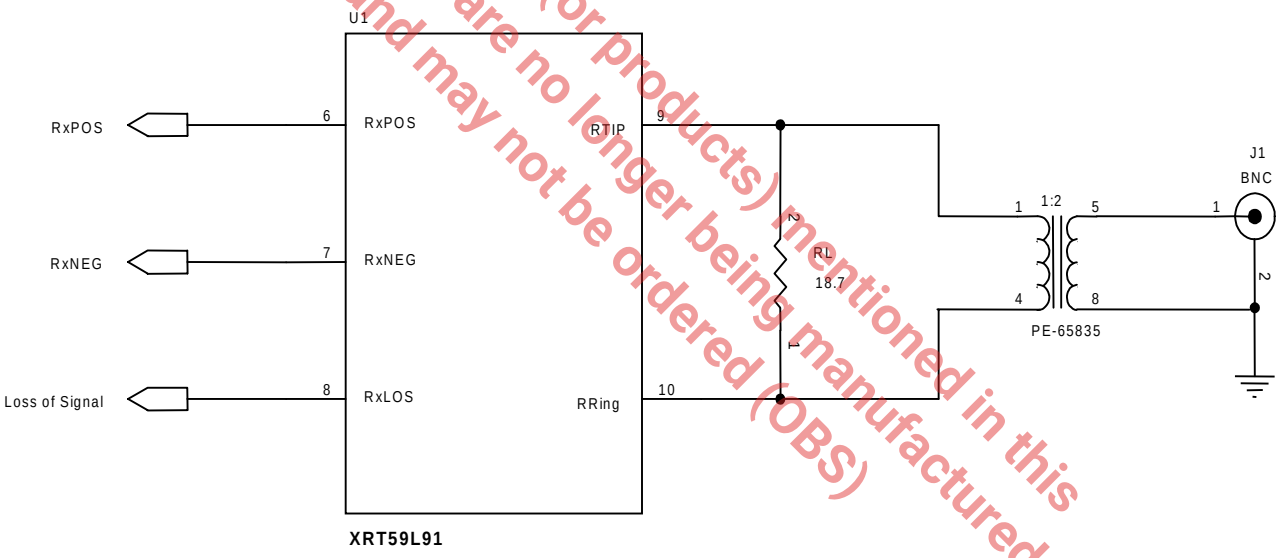

Figure 7. Recommended Schematic for Interfacing the Receive Section of the XRT59L91 Device to the Line for 75Ω Applications (Transformer-Coupling)

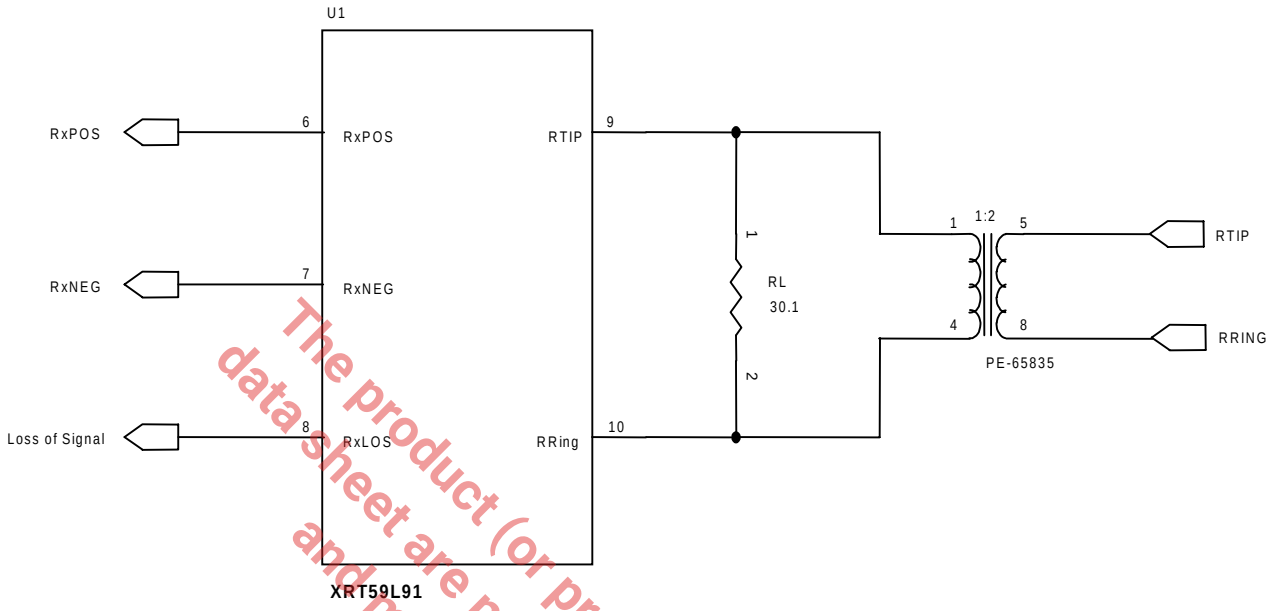

Figure 8. Recommended Schematic for Interfacing the Receive Section of the XRT59L91 Device to the Line for 120Ω Applications (Transformer-Coupling)

Note:

Figures 7 and 8 indicate that the user should use a "2:1 STEP-DOWN" transformer, when interfacing the receiver to the line.

The product (or products) mentioned in this data sheet are no longer being manufactured and may not be ordered (OBS)

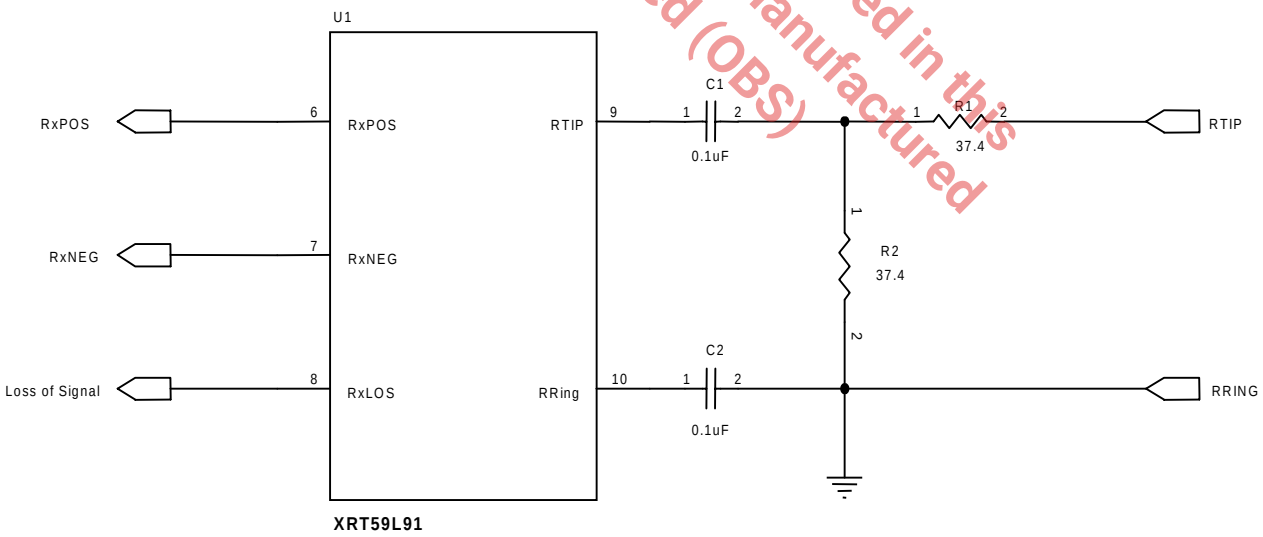

Figure 9. Recommended Schematic for Interfacing the Receive Section of the XRT59L91 Device to the Line for 75Ω Applications (Capacitive-Coupling)

2.2 The "Receive Equalizer" Block

After the XRT59L91 device has received the incoming line signal, via the RTIP and RRing input pins, the first block that this signal will pass through is the Receive Equalizer block.

As the line signal is transmitted from a given "Transmitting" terminal, the pulse shapes (at that location) are basically "square". As this line signal travels from the "transmitting terminal" (via the coaxial cable or twisted pair) to the receiving terminal, it will be subjected to "frequency-dependent" loss. In other words, the higher frequency components of the signal will be subjected to a greater amount of attenuation than will the lower frequency components. If this line signal travels over reasonably long cable lengths, then the shape of the pulses (which were originally square) will be distorted and cause inter-symbol interference to increase.

The purpose of this block is to equalize the incoming distorted signal, due to cable loss. In essence, the Receive Equalizer block accomplishes this by subjecting the received line signal to "frequency-dependent" amplification (which attempts to counter the frequency-dependent loss that the line signal has experienced). By doing this, the Receive Equalizer is attempting to restore the shape of the line signal so that the received data can be recovered reliably.

2.3 The "Peak Detector and Slicer Block

After the incoming line signal has passed through the Receive Equalizer block, it will be routed to the "Slicer" block. The purpose of the "Slicer" block is to quantify a given bit-period (or symbol) within the incoming line signal as either a "1" or a "0".

2.4 The "LOS Detector" Block

The LOS Detector block, within the XRT59L91 was specifically designed to comply with the "LOS Declaration/Clearance" requirements per ITU-T G.775. As a consequence, the XRT59L91 device will declare an LOS Condition, (by driving the "RxLOS" output pin "high") if the received line signal amplitude drops to –35dB or below. Further, the XRT59L91 device will clear the LOS Condition if the signal amplitude rises back up to –12dB or above. Figure 10 presents an illustration of G.775 spec for declaring and clearing LOS.

The product (or producing) mentioned in this data sheet are no longer being manufactured and may not be ordered (OBS)

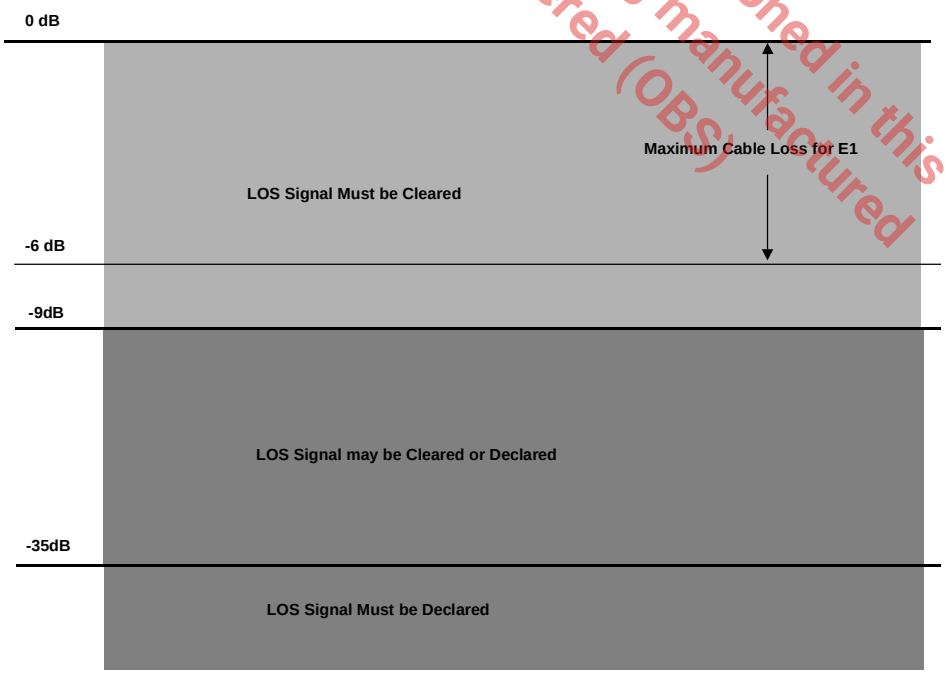

Figure 10. Illustration of G.775 Spec.

Timing Requirements associated with Declaring and Clearing the LOS Indicator.

The XRT59L91 device was designed to meet the ITU-T G.775 specification timing requirements for declaring and clearing the LOS indicator. In particular, the XRT59L91 device will declare LOS, between 10 and 255 UI (or E1 bit-periods) after the actual time the LOS condition occurred. Further, the XRT59L91 device will clear the LOS indicator within 10 to 255 UI after restoration of the incoming line signal. Figure 11 illustrates the LOS Declaration and Clearance behavior, in response to first, the "Loss of Signal" event and then afterwards, the restoration of the signal.

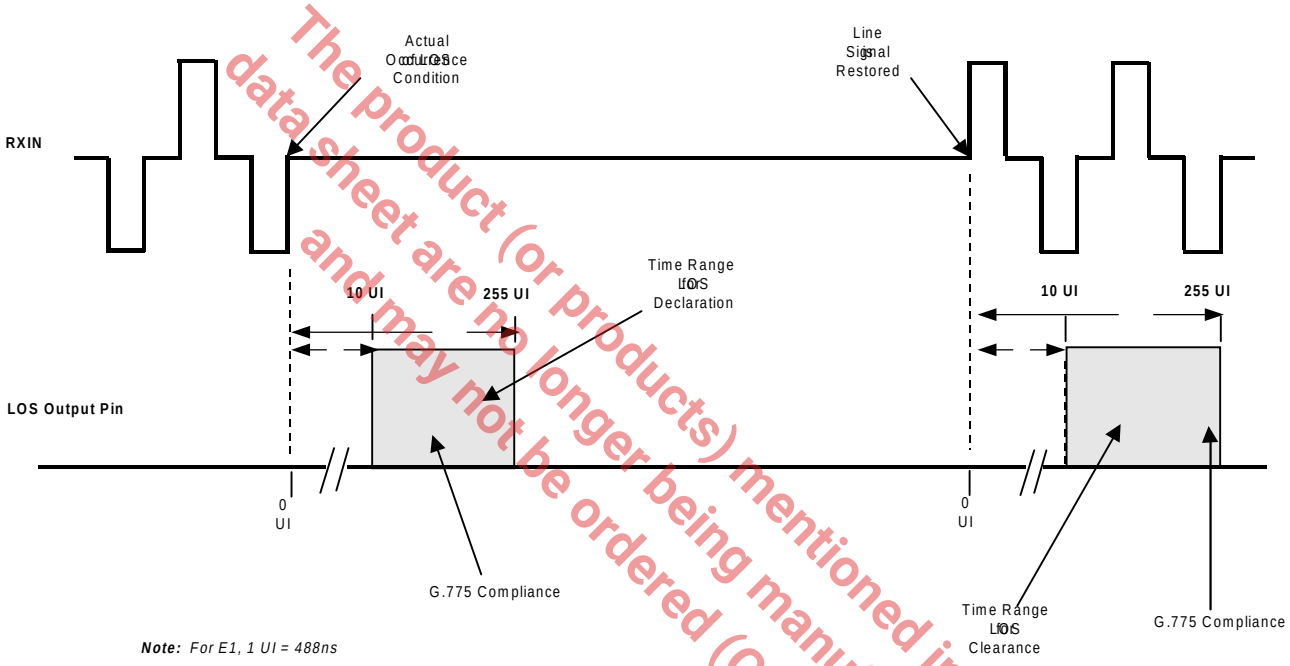

The product (or products) mentioned in this data sheet are no longer being manufactured and may not be ordered (OBS)

Figure 11. The Behavior of the LOS Output Indicator, in response to the Loss of Signal, and the Restoration of the Signal

2.5 The "Receive Output Interface" Block

The purpose of the "Receive Output Interface" block is to interface directly with the "Receiving Terminal Equipment". The "Receive Output Interface" block outputs the data (which has been recovered from the incoming line signal) to the "Receive Terminal Equipment" via the "RxPOS and RxNEG output pins.

If the "Receive Section" of the XRT59L91 device has received a "Positive-Polarity" pulse, via the RTIP and RRing input pins, then the Receive Output Interface will output a pulse at the "RxPOS" output pin.

Similarly, if the "Receive Section" of the XRT59L91 device has received a "Negative-Polarity" pulse, via the RTIP and RRing input pins, then the Receive Output Interface will output a pulse at the "RxNEG" output pin.

3.0 Diagnostic Features

In order to support diagnostic operations, the XRT59L91 supports the following loopback modes:

- Local Loopback
- Remote Loopback

Each of these loopback modes will be discussed below.

3.1 The Local Loop-Back Mode

When the XRT59L91 device is configured to operate in the "Local Loop-back" Mode, the XRT59L91 device will ignore any signals that are input to the RTIP and RRing input pins. The "Transmitting Terminal Equipment" will transmit data (and clock, for "Clocked" Mode) into the XRT59L91 device via the TxPOS, TxNEG and TxCLK input pins. This data will be processed through the "Transmit Terminal Input Interface" and the "Pulse Shaping" circuit. Finally, this data will be output to the line via the TTIP and TRing output pins. Additionally, this data (which is being output via the TTIP and TRing output pins) will be looped back into the "Receive Equalizer" block. As a consequence, this data will also be processed through the entire "Receive Section" of the XRT59L91 device. After this "post-loop-back" data has been processed through the "Receive Section" it will output, to the "Near-End Receiving Terminal Equipment" via the "RxPOS and RxNEG output pins.

Figure 12, illustrates the path that the data takes (within the XRT59L91 device), when the chip is configured to operate in the "Local Loop-back" Mode.

The product (or products) mentioned in this data sheet are no longer being manufactured and may not be ordered (OBS)

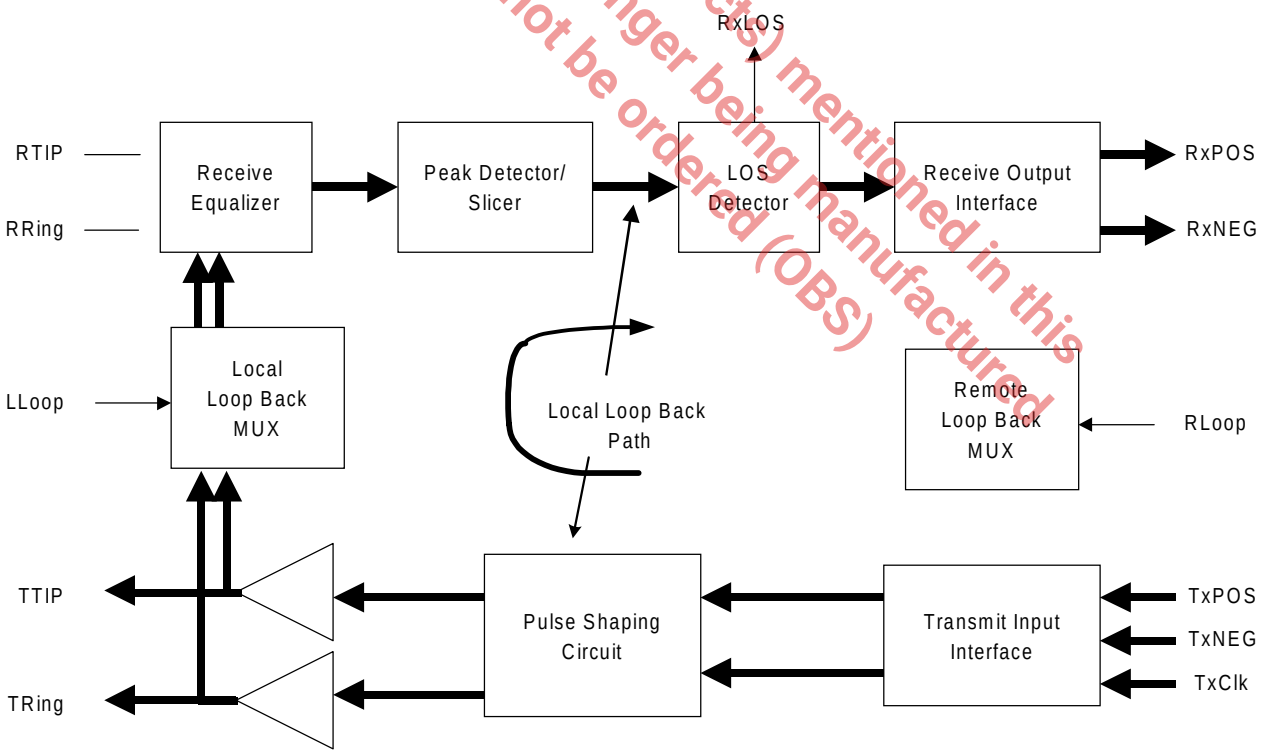

Figure 12. Illustration of the "Local Loop-back" within the XRT59L91 Device

The user can configure the XRT59L91 device to operate in the "Local Loop-back" Mode, by pulling the "LLoop" input pin (pin 4) to VDD.

3.2 The Remote Loop Back Mode

When the XRT59L91 device is configured to operate in the "Remote Loop-back" Mode, the XRT59L91 device will ignore any signals that are input to the TxPOS and TxNEG input pins. The XRT59L91 device will receive the incoming line signals, via the RTIP and RRing input pins. This data will be processed through the entire Receive Section (within the XRT59L91) and will output to the "Receive Terminal Equipment" via the "RxPOS" and "RxNEG" output pins. Additionally, this data will also be internally looped back to the "Transmit Input Interface" block within the "Transmit Section". At this point, this data will be routed through the remainder of the "Transmit Section" of the XRT59L91 device and will be transmitted out onto the line via the "TTIP" and "TRing" output pins.

Figure 13, illustrates the path that the data takes (within the XRT59L91 device) when the chip is configured to operate in the "Remote Loop-back" Mode.

This product (or products) mentioned in this data sheet are no longer being manufactured and may not be ordered (OBS)

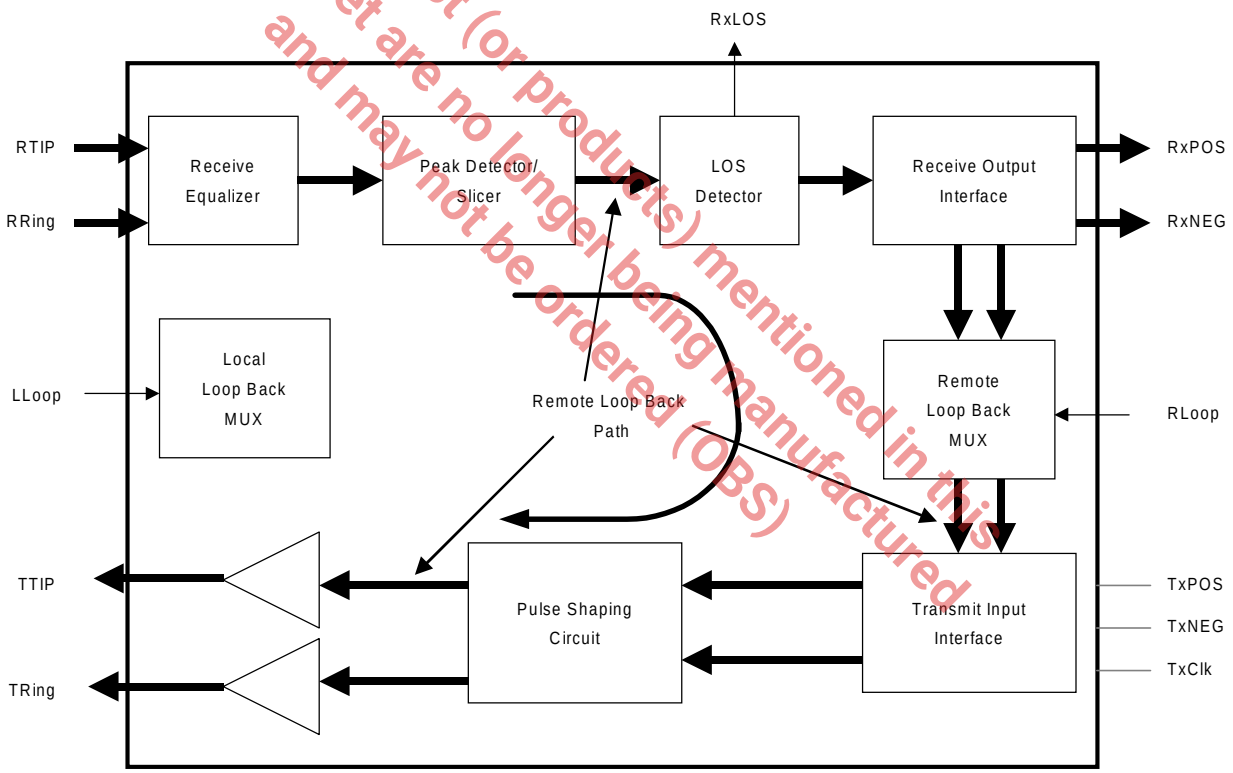

Figure 13. Illustration of the "Remote Loop-back" path, within the XRT59L91 Device

It should be noted that during "Remote Loop-back" operation, any data which is input via the RTIP and RRING input pins, will also be output to the Terminal Equipment, via the RxPOS and RxNEG output pins.

4.0 Shutting off the Transmitter

The XRT59L91 device permits the user to shut the "Transmit Driver" within the Transmit Section of the chip. This feature can be useful for system redundancy design considerations or during diagnostic testing. The user can activate this feature by either of the following ways.

Method 1:

Connect the Transmit Data input pins (e.g., TxPOS and TxNEG) to a logic "1"; or allow them to float. (These input pins have an internal "pull-up" resistor).

Method 2:

Connect the "TxClk" input pin to a logic "0" (e.g., GND) and continue to apply data via the TxPOS and TxNEG input pins.

The product (or products) mentioned in this data sheet are no longer being manufactured and may not be ordered (OBS)

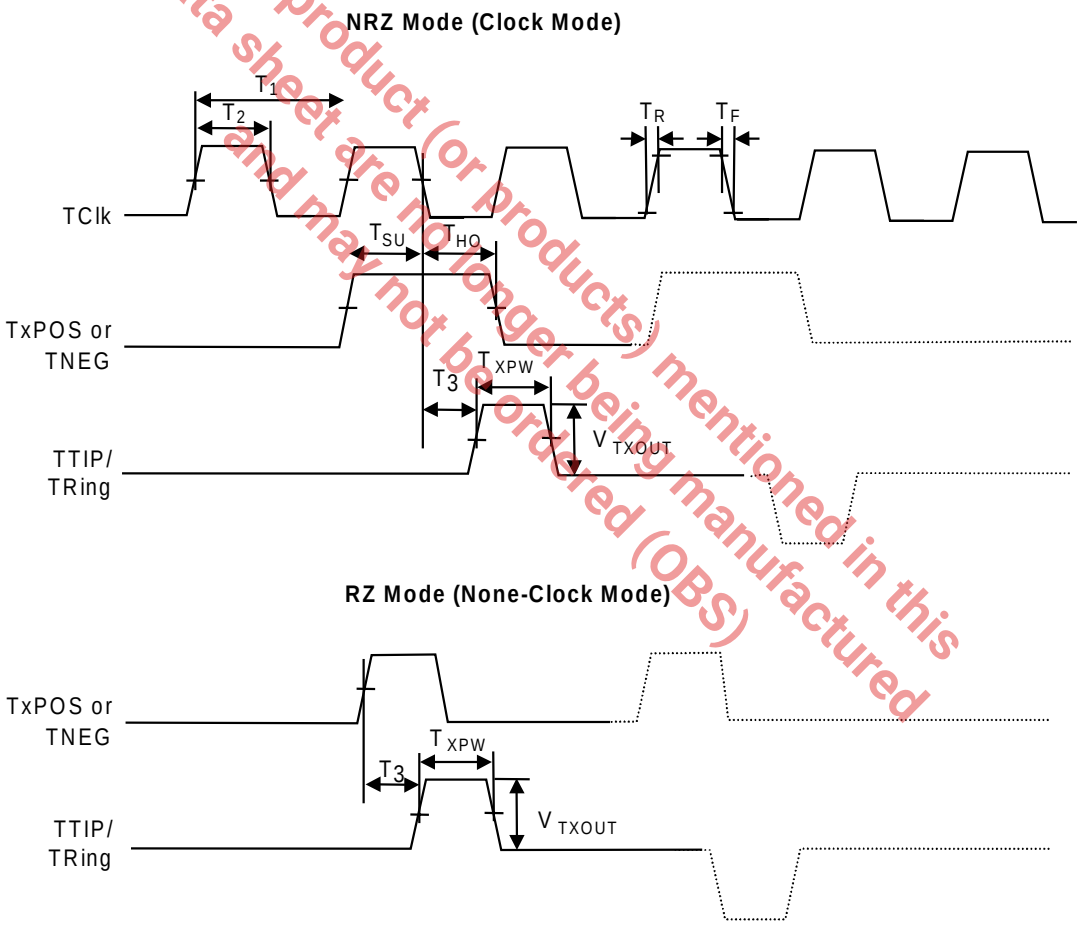

Figure 14. Transmit Timing Diagram

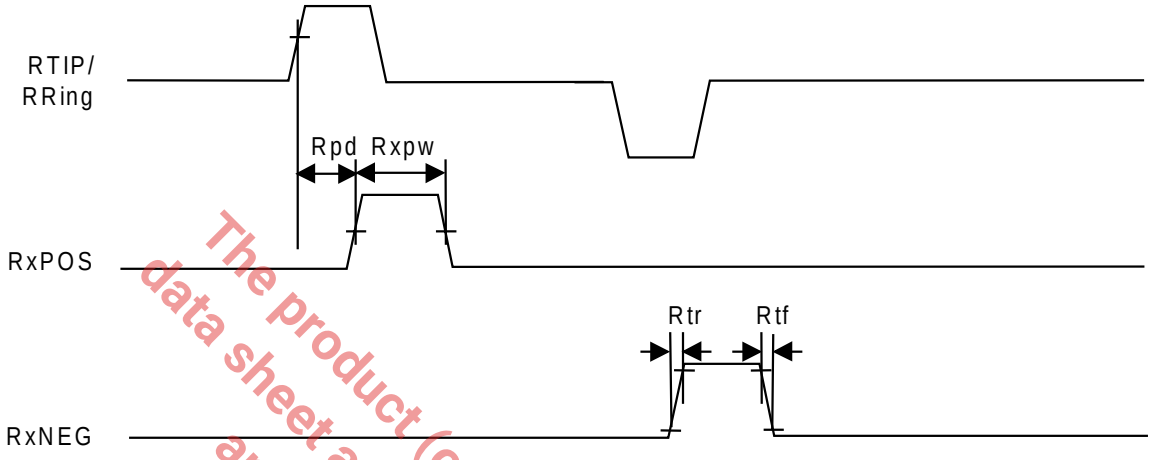

Figure 15. Receive Timing Diagram

The product (or products) mentioned in this data sheet are no longer being manufactured and may not be ordered (OBS)

APPLICATIONS INFORMATION

Figures 16, 17 and 18, provide example schematics on how to interface the XRT59L91 device to the line, under the following conditions:

- Receiver is Transformer-coupled to a 75Ω unbalanced line.
- Receiver is Transformer-coupled to a 120Ω balanced line.
- Receiver is Capacitive-coupled to a 75Ω unbalanced line

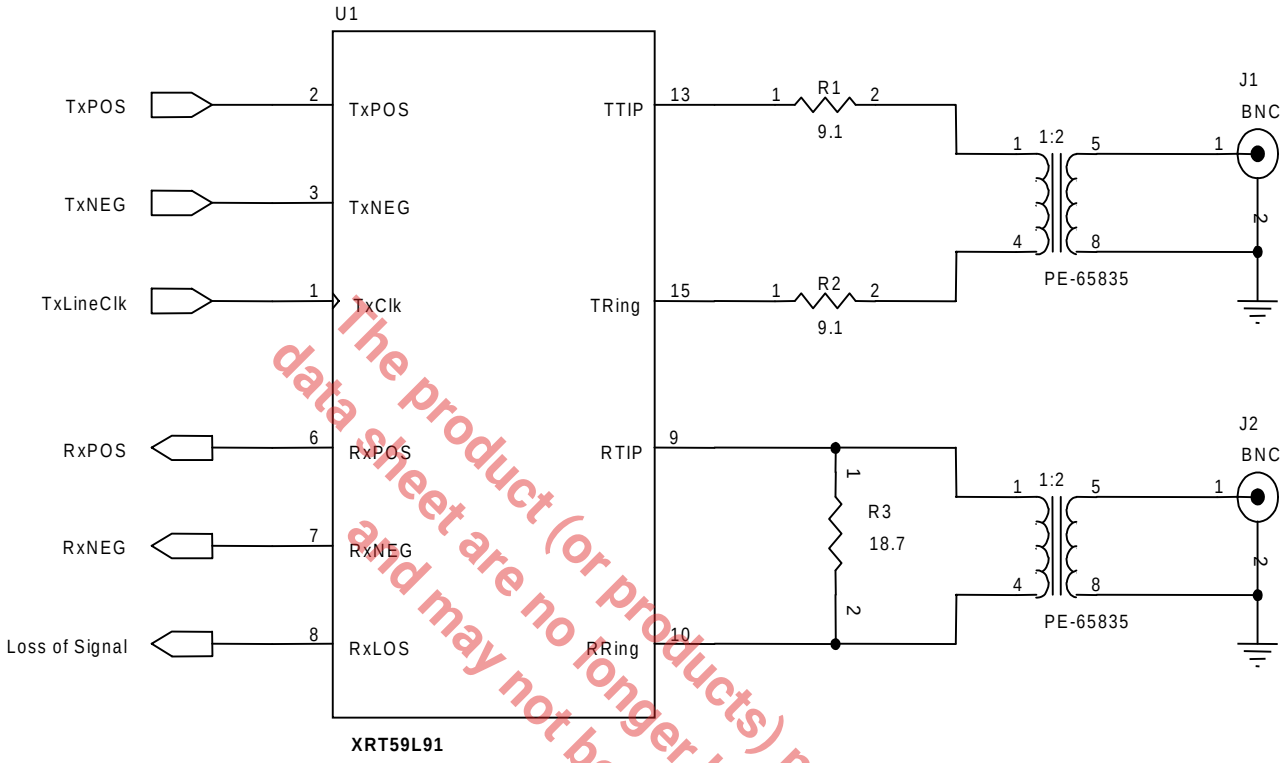

The product (or products) mentioned in this data sheet are no longer being manufactured and may not be ordered (OBS)

Figure 16. Illustration on how to interface the XRT59L91 Device to the Line (Receiver is Transformer-coupled to a 75Ω unbalanced line)

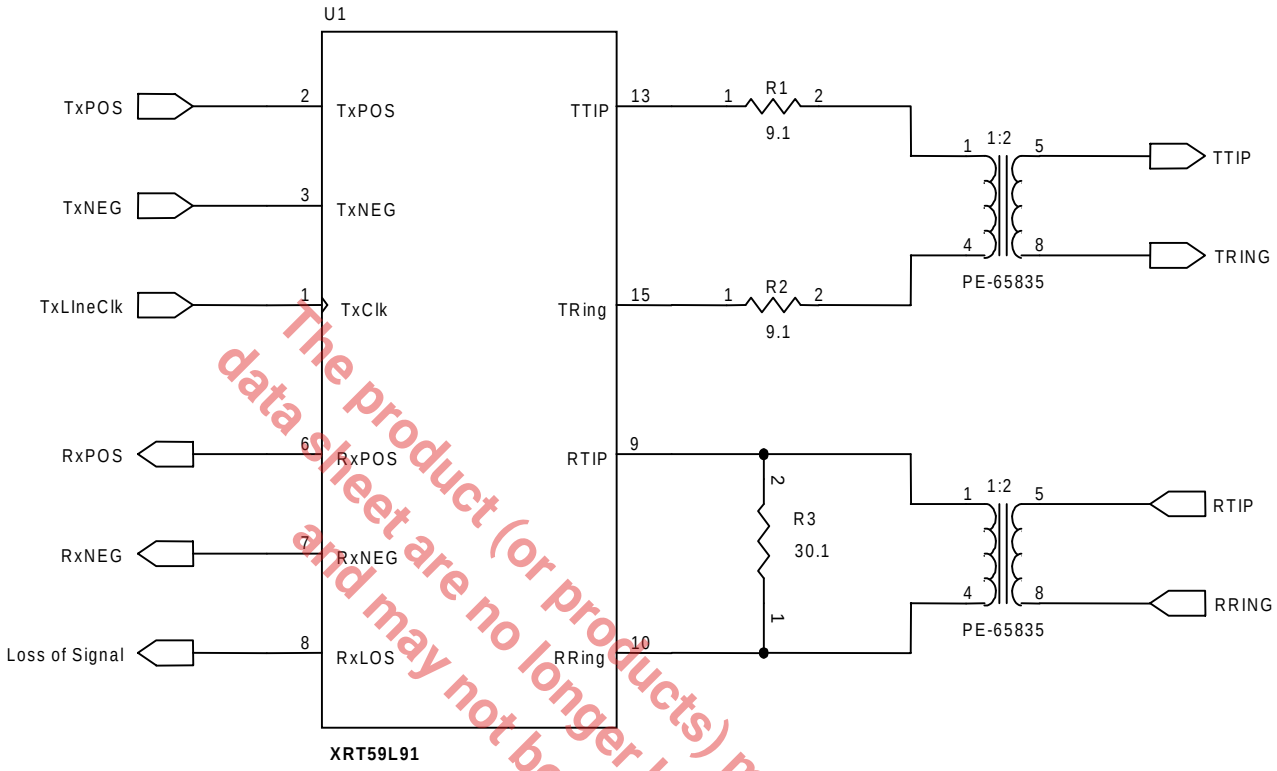

The product (or products) mentioned in this data sheet are no longer being manufactured and may not be ordered (OBS)

Figure 17. Illustration on how to interface the XRT59L91 Device to the Line (Receiver is Transformer-coupled to a 120Ω balanced line)

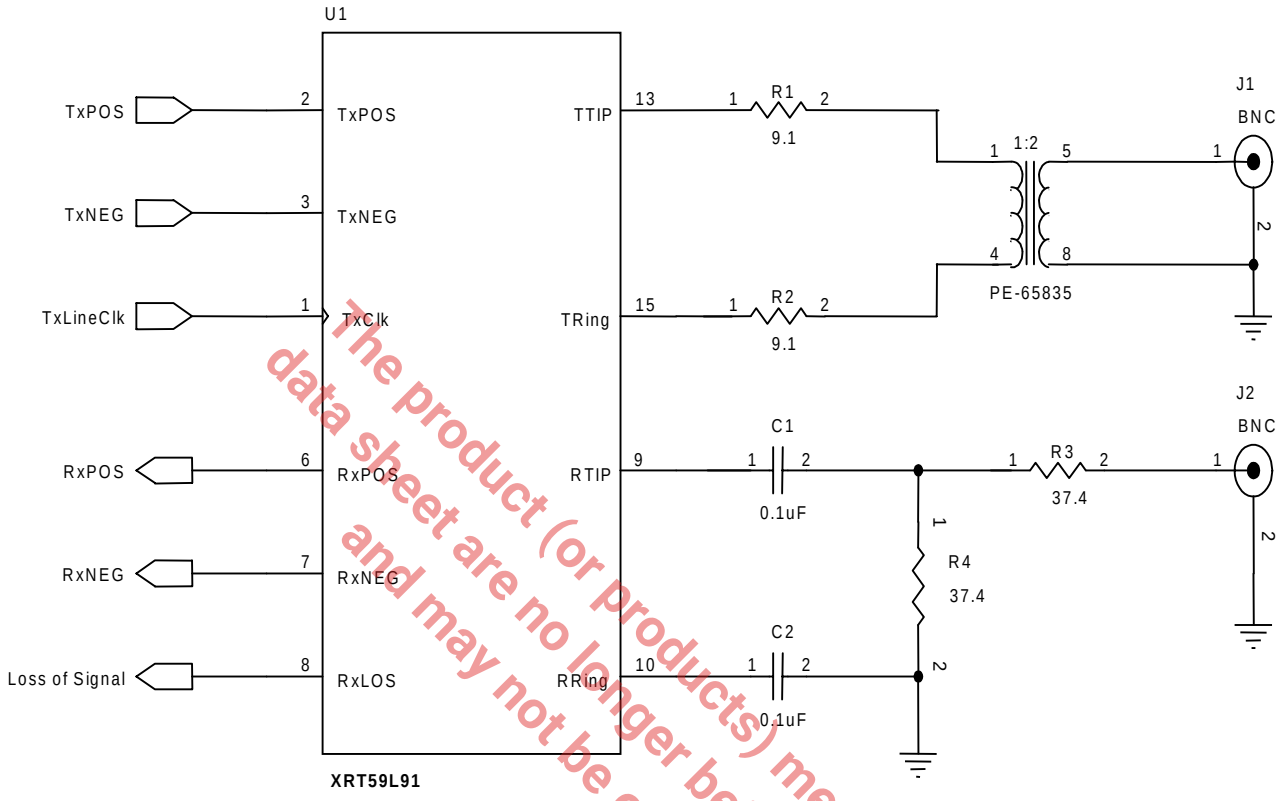

The product (or products) mentioned in this data sheet are no longer being manufactured and may not be ordered (OBS)

Figure 18. Illustration on how to interface the XRT59L91 Device to the Line (Receiver is Capacitive-coupled to a 75Ω unbalanced line)

16 LEAD SMALL OUTLINE (300 MIL JEDEC SOIC)

Rev. 1.00

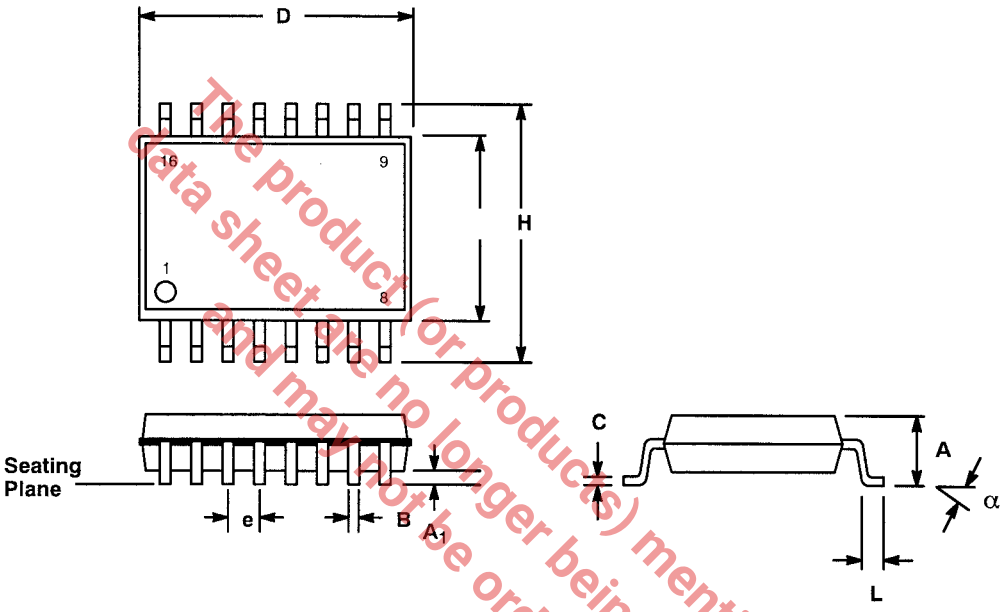

The product(s) mentioned in this data sheet are no longer being manufactured and may not be ordered (OBS)

SYMBOL	INCHES		MILLIMETERS	
	MIN	MAX	MIN	MAX
A	0.093	0.104	2.35	2.65
A_1	0.004	0.012	0.10	0.30
B	0.013	0.020	0.33	0.51
C	0.009	0.013	0.23	0.32
D	0.398	0.413	10.10	10.50
E	0.291	0.299	7.40	7.60
e	0.050 BSC		1.27 BSC	
H	0.394	0.419	10.00	10.65
L	0.016	0.050	0.40	1.27
α	0°	8°	0°	8°

Note: The control dimension is the millimeter column

Notes

The product (or products) mentioned in this data sheet are no longer being manufactured and may not be ordered (OBS)

Notes

The product (or products) mentioned in this data sheet are no longer being manufactured and may not be ordered (OBS)

The product (or products) mentioned in this data sheet are no longer being manufactured and may not be ordered (OBS)

NOTICE

EXAR Corporation reserves the right to make changes to the products contained in this publication in order to improve design, performance or reliability. EXAR Corporation assumes no responsibility for the use of any circuits described herein, conveys no license under any patent or other right, and makes no representation that the circuits are free of patent infringement. Charts and schedules contained here in are only for illustration purposes and may vary depending upon a user's specific application. While the information in this publication has been carefully checked; no responsibility, however, is assumed for in accuracies.

EXAR Corporation does not recommend the use of any of its products in life support applications where the failure or malfunction of the product can reasonably be expected to cause failure of the life support system or to significantly affect its safety or effectiveness. Products are not authorized for use in such applications unless EXAR Corporation receives, in writing, assurances to its satisfaction that: (a) the risk of injury or damage has been minimized; (b) the user assumes all such risks; (c) potential liability of EXAR Corporation is adequately protected under the circumstances.

Copyright 1999 EXAR Corporation
Datasheet October 1999
Reproduction, in part or whole, without the prior written consent of EXAR Corporation is prohibited.