Data Sheet | Item Number: 750-481/003-000

2-channel analog input; Resistance measurement; Intrinsically safe

https://www.wago.com/750-481/003-000

DISCONTINUED: 31.12.2021

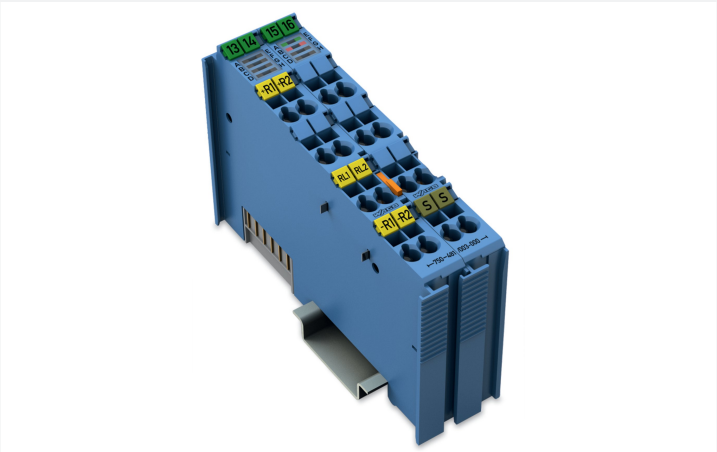

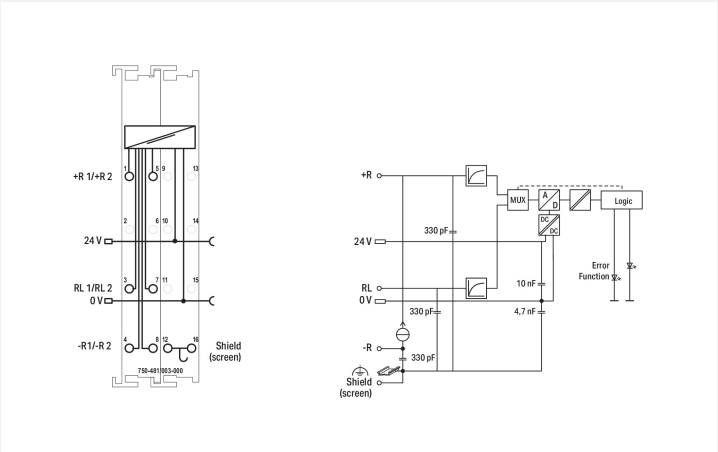

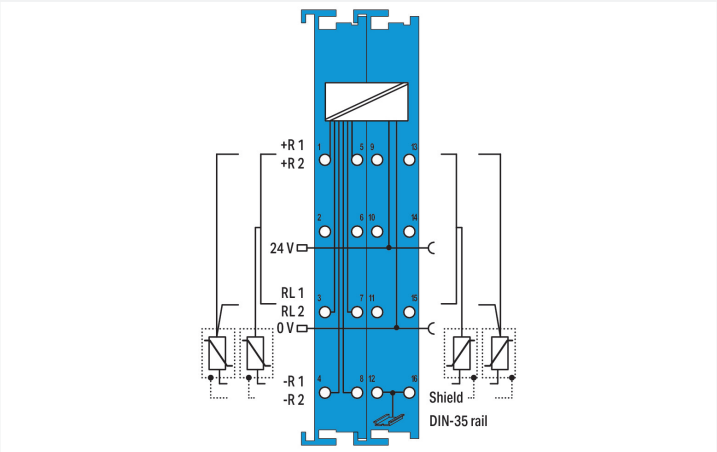

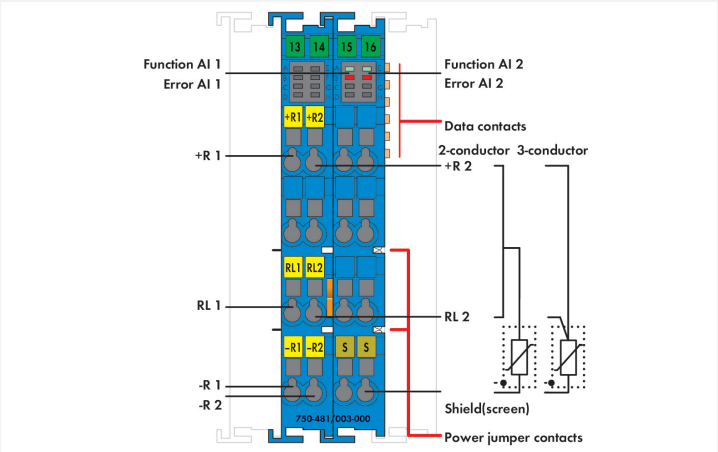

This analog input module directly connects to Pt and Ni resistance sensors or potentiometers located in hazardous areas of Zones 0 and 1.
The WAGO I/O System 750 must be installed either in Zone 2 or in a non-hazardous area. The 24 V supply is derived from the module's power jumper contacts.
The shield directly connects to the DIN-rail.

Indicators:

- Green LED (availability ON/OFF)
- Red LED (short circuit, wire breakage, measurement range overflow/underflow)

Field and system levels are electrically isolated.

Notes

Note	The analog input module must only be operated via 24 VDC Ex i! General information (e.g., installation regulations) on explosion protection is available in the WAGO I/O System 750 manuals!

Technical data

Item description	2-Channel Analog Input; RTD
Number of analog inputs	2
Total number of channels (module)	2
Signal type	Resistance measurement Potentiometer positions
Signal type (configurable)	Yes
Sensor connection	2 x (2-wire, 3-wire)
Sensor types	Pt100; Configurable: Pt200, Pt500, Pt1000, Ni100, Ni120, Ni1000; Potentiometer setting 0 … 100 %: 1k2, 5k0
Temperature range	−200 … +850 °C (Pt), −60 … +250 °C (Ni), −80 … +320 °C (Ni120)
Resolution (over entire range)	0.1 °C, 0.1 Ω, 0.0049 %
Conversion time (typ.)	325 ms
Conversion time	150 … 500 ms (per channel)
Measurement error (reference temperature)	25 °C
Measurement error, deviation (max.) from the upper-range value	0.2 %
Temperature error (max.) of the upper-range value	0.01 %/K
Measuring current (typ.)	< 0.5 mA
Intrinsically safe Ex i	Yes
Data width	2 x 16-bit data; 2 x 8-bit control/status (optional)
Configuration options	WAGO-I/O-*CHECK* CODESYS Library ***e!****COCKPIT*
Supply voltage (system)	5 VDC; via data contacts
Current consumption (5 V system supply)	25 mA
Supply voltage (field)	24 VDC; (Ex i power supply: U_o = max. 27.3 V); via power jumper contacts (power supply via blade contact; transmission via spring contact)
Current consumption, field supply (module with no external load)	12 mA
Power consumption $P_{max.}$	0.45 W
Power loss P_l	0.45 W
Isolation	300 VAC system/supply
Number of incoming power jumper contacts	2
Number of outgoing power jumper contacts	2
Current carrying capacity (power jumper contacts)	1 A
Indicators	LED (A, E) green: Function AI 1, AI 2; LED (B, F) red: Error AI 1, AI 2

Explosion protection

Identification	ATEX II 3 (1) G Ex ec [ia Ga] IIC T4 Gc II (1) D [Ex ia Da] IIIC I (M1) [Ex ia Ma] I IECEx/ INMETRO Ex ec [ia Ga] IIC T4 Gc [Ex ia Da] IIIC [Ex ia Ma] I cULus (Zone classified) Cl I Zn 2 AEx nA [ia Ga] IIC T4 Gc Cl I Zn 2 AEx nA [ia IIIC] IIC T4 Gc Ex nA [ia Ga] IIC T4 Gc X Ex nA [ia IIIC] IIC T4 Gc X cULus (Devision classified) Class I, Div. 2, Group A B C D, T4
Ex standard	EN IEC 60079-0, -7, -11
Safety-relevant data (circuit)	U_o = 7.2 V ; I_o = 5.8 mA; P_o = 10.5 mW; linear characteristic curve
Reactances Ex ia IIC	L_o = 0.9 H; C_o = 13.5 µF
Reactances Ex ia IIB	L_o = 1 H; C_o = 240 µF
Reactances Ex ia IIA	L_o = 1 H; C_o = 1000 µF
Reactances Ex ia I	L_o = 1 H; C_o = 1000 µF
Reactances (note)	Reactances without accounting for the concurrence of capacitance (C_o) and inductance (L_o)

 Continued on next page

Connection data

Connection technology: inputs/outputs	16 x CAGE CLAMP®
Connection type 1	Inputs/outputs
Solid conductor	0.08 … 2.5 mm² / 28 … 14 AWG
Fine-stranded conductor	0.08 … 2.5 mm² / 28 … 14 AWG
Strip length	8 … 9 mm / 0.31 … 0.35 inches

Physical data

Width	24 mm / 0.945 inches
Height	100 mm / 3.937 inches
Depth	67.8 mm / 2.669 inches
Depth from upper-edge of DIN-rail	60.6 mm / 2.386 inches

Mechanical data

Mounting type	DIN-35 rail

Material data

Housing material	Polycarbonate; polyamide 6.6
Fire load	2.299 MJ
Weight	92.7 g
Conformity marking	CE

Environmental requirements

Ambient temperature (operation)	0 … +55 °C
Ambient temperature (storage)	-25 … +85 °C
Protection type	IP20
Pollution degree	2 per IEC 61131-2
Operating altitude	0 … 2000 m / 0 … 6562 ft
Mounting position	Horizontal left, horizontal right, horizontal top, horizontal bottom, vertical top and vertical bottom
Relative humidity (without condensation)	95 %
Vibration resistance	4g per IEC 60068-2-6
Shock resistance	15g per IEC 60068-2-27
EMC immunity to interference	per EN 61000-6-2, marine applications
EMC emission of interference	per EN 61000-6-3, marine applications
Exposure to pollutants	per IEC 60068-2-42 and IEC 60068-2-43
Permissible H_2S contaminant concentration at a relative humidity 75 %	10 ppm
Permissible SO_2 contaminant concentration at a relative humidity 75 %	25 ppm

Commercial data

Product Group	15 (I/O System)
eCl@ss 10.0	27-24-26-01
eCl@ss 9.0	27-24-26-01
ETIM 9.0	EC001596
ETIM 8.0	EC001596
PU (SPU)	5 pcs
Packaging type	Box
End of Sale	2021-12-31
End of Production	2020-12-31
End of Delivery	2022-03-01
End of Service and Repair	2023-12-31

 Continued on next page

Environmental Product Compliance

CAS-No.	1303-86-2 1317-36-8 7439-92-1
REACH Candidate List Substance	Diboron trioxide Lead Lead monoxide
RoHS Compliance Status	Compliant,With Exemption
RoHS Exemption	6(c) 7(a) 7(c)-I 7(c)-II
SCIP notification number (Austria)	fd7fc909-bea7-4ff5-9ef9-d555ae3f61c8
SCIP notification number (Belgium)	64953c5d-d266-4abb-8705-f696c56dba5b
SCIP notification number (Bulgaria)	6d2bf9cb-ecdc-4f7e-82a7-c38d961359f7
SCIP notification number (Czech Republic)	ad08b048-63a1-469e-a4a2-db978fcc9267
SCIP notification number (Denmark)	b6f69e5a-a9f0-49be-ac21-4a2f025a1340
SCIP notification number (Finland)	fad4b1bd-851d-49d6-a359-03d00addfba6
SCIP notification number (France)	e971e74f-8dcd-4c88-a3d9-b149aaf0e49f
SCIP notification number (Germany)	78ef6ead-2be5-4da3-b4b7-7fc08c0f2ef3
SCIP notification number (Hungary)	993af024-34b0-4cbf-a8b0-622dcb92cdff
SCIP notification number (Italy)	fd497d99-a40e-498c-814b-91c7920415b5
SCIP notification number (Netherlands)	95efcc28-9c3d-4438-9dfa-84c5b8f670bd
SCIP notification number (Poland)	068b620b-e6ae-423f-8973-931e324899f3
SCIP notification number (Romania)	69f08403-1709-4d37-9e87-574e422c3059
SCIP notification number (Sweden)	b79fffa4-f025-4253-a8b0-cb616c22b02e

Approvals / Certificates

General approvals

Approval	Standard	Certificate Name
KC National Radio Research Agency	Article 58-2, Clause 3	MSIP-REM-W43-AIM750
UL Underwriters Laboratories Inc. (ORDINARY LOCATIONS)	UL 508	E175199

Declarations of conformity and manufacturer's declarations

Approval	Standard	Certificate Name
EU-Declaration of Conformity WAGO GmbH & Co. KG	-	-

Approvals for marine applications

Approval	Standard	Certificate Name
ABS American Bureau of Shipping	-	22-2219060
BV Bureau Veritas S.A.	-	30389/C0 BV
DNV DNV GL SE	DNV-CG-0339,Aug.2021	TAA0000194
KR Korean Register of Shipping	-	KR HMB05880-AC001

Approvals for marine applications

LR Lloyds Register EMEA	-	LR22180952TA
PRS Polski Rejestr Statków	-	TE/1101/880590/23
RINA RINA Germany GmbH	-	ELE343521XG001

 Continued on next page

Approvals for hazardous areas

Approval	Standard	Certificate Name
AEx UL International Germany GmbH	UL 60079	E480271
ATEX TUEV Nord Cert GmbH	EN 60079-0	TUEV12ATEX106032X (Ex ec[iaGa] IIC T4 Gc, [Ex ia-Da] IIIC, [Ex iaMa] I)
CCC CNEX	CNCA-C23-01	2020312310000211 (Ex ec[iaGa] IIC T4 Gc, [Ex ia-Da] IIIC, [Ex iaMa] I)
IECEx TUEV Nord Cert GmbH	IEC 60079	IECEx TUN12.0039X (Ex ec[iaGa] IIC T4 Gc, [Ex ia-Da] IIIC, [Ex iaMa] I)
INMETRO TÜV Rheinland do Brasil Ltda.	-	TÜV_14.1911_X
UKEx Element Materials Technology UK	-	EMA21UKEX0069X
UL Underwriters Laboratories Inc. (HAZARDOUS LOCATIONS)	UL 121201	E198726

Downloads

Environmental Product Compliance

Compliance Search
Environmental Product Compliance 750-481/003-000

Documentation

Manual			
Product Manual 2-channel, resistance sensors, Ex i	V 1.4.0	pdf 2566.38 KB	

System Description		
750/753 Series I/O-System – General Product Information	pdf 953.35 KB	
Overview on WAGO-I/O-SYSTEM 750 approvals	pdf 770.48 KB	
Ex i Overview	pdf 442.07 KB	

 Continued on next page

Bid Text			
750-481/003-000	19.02.2019	xml 6.72 KB	
750-481/003-000	06.10.2017	doc 32.50 KB	

Instruction Leaflet			
CCC Ex (Additional information)	26.04.2023	pdf 143.96 KB	

Application Notes

Application Note CoDeSys 2.3			
Application Note Library ModuleAccess_01	05.01.2016 29.01.2016	zip 1001.22 KB	

CAD/CAE-Data

CAD data
2D/3D Models 750-481/003-000

CAE data
EPLAN Data Portal 750-481/003-000
WSCAD Universe 750-481/003-000
ZUKEN Portal 750-481/003-000

Device Files

Device Driver			
WAGO USB Service Kabel Treiber / Serie 750 und 857	6.5.3.0 10.09.2014	zip 4721.96 KB	

1 Compatible Products

1.1 Optional Accessories

1.1.1 DIN-rail

1.1.1.1 Mounting accessories

Item No.: 210-196
Aluminum carrier rail; 35 x 8.2 mm; 1.6 mm thick; 2 m long; unslotted; similar to EN 60715; silver-colored

Item No.: 210-198
Copper carrier rail; 35 x 15 mm; 2.3 mm thick; 2 m long; unslotted; according to EN 60715; copper-colored

Item No.: 210-508
Steel carrier rail; 35 x 15 mm; 1.5 mm thick; 2 m long; slotted; galvanized; similar to EN 60715; silver-colored

Item No.: 210-197
Steel carrier rail; 35 x 15 mm; 1.5 mm thick; 2 m long; slotted; similar to EN 60715; silver-colored

Item No.: 210-506
Steel carrier rail; 35 x 15 mm; 1.5 mm thick; 2 m long; unslotted; galvanized; similar to EN 60715; silver-colored

Item No.: 210-114
Steel carrier rail; 35 x 15 mm; 1.5 mm thick; 2 m long; unslotted; similar to EN 60715; silver-colored

Item No.: 210-118
Steel carrier rail; 35 x 15 mm; 2.3 mm thick; 2 m long; unslotted; according to EN 60715; silver-colored

Item No.: 210-115
Steel carrier rail; 35 x 7.5 mm; 1 mm thick; 2 m long; slotted; according to EN 60715; "Hole width 18 mm; silver-colored

Item No.: 210-112
Steel carrier rail; 35 x 7.5 mm; 1 mm thick; 2 m long; slotted; according to EN 60715; "Hole width 25 mm; silver-colored

Item No.: 210-504
Steel carrier rail; 35 x 7.5 mm; 1 mm thick; 2 m long; slotted; galvanized; according to EN 60715; silver-colored

Item No.: 210-113
Steel carrier rail; 35 x 7.5 mm; 1 mm thick; 2 m long; unslotted; according to EN 60715; silver-colored

Item No.: 210-505
Steel carrier rail; 35 x 7.5 mm; 1 mm thick; 2 m long; unslotted; galvanized; according to EN 60715; silver-colored

 Continued on next page

1.1.2 Marking

1.1.2.1 Group marker carrier

Item No.: 750-107
Group marker carrier

1.1.2.2 Marker

Item No.: 2009-145/000-006
Mini-WSB Inline; for Smart Printer; 1700 pieces on roll; stretchable 5 - 5.2 mm; plain; snap-on type; blue

Item No.: 2009-145/000-007
Mini-WSB Inline; for Smart Printer; 1700 pieces on roll; stretchable 5 - 5.2 mm; plain; snap-on type; gray

Item No.: 2009-145/000-023
Mini-WSB Inline; for Smart Printer; 1700 pieces on roll; stretchable 5 - 5.2 mm; plain; snap-on type; green

Item No.: 2009-145/000-012
Mini-WSB Inline; for Smart Printer; 1700 pieces on roll; stretchable 5 - 5.2 mm; plain; snap-on type; orange

Item No.: 2009-145/000-005
Mini-WSB Inline; for Smart Printer; 1700 pieces on roll; stretchable 5 - 5.2 mm; plain; snap-on type; red

Item No.: 2009-145/000-024
Mini-WSB Inline; for Smart Printer; 1700 pieces on roll; stretchable 5 - 5.2 mm; plain; snap-on type; violet

Item No.: 2009-145
Mini-WSB Inline; for Smart Printer; 1700 pieces on roll; stretchable 5 - 5.2 mm; plain; snap-on type; white

Item No.: 2009-145/000-002
Mini-WSB Inline; for Smart Printer; 1700 pieces on roll; stretchable 5 - 5.2 mm; plain; snap-on type; yellow

Item No.: 248-501/000-006
Mini-WSB marking card; as card; not stretchable; plain; snap-on type; blue

Item No.: 248-501/000-007
Mini-WSB marking card; as card; not stretchable; plain; snap-on type; gray

Item No.: 248-501/000-023
Mini-WSB marking card; as card; not stretchable; plain; snap-on type; green

Item No.: 248-501/000-017
Mini-WSB marking card; as card; not stretchable; plain; snap-on type; light green

Item No.: 248-501/000-012
Mini-WSB marking card; as card; not stretchable; plain; snap-on type; orange

Item No.: 248-501/000-005
Mini-WSB marking card; as card; not stretchable; plain; snap-on type; red

Item No.: 248-501/000-024
Mini-WSB marking card; as card; not stretchable; plain; snap-on type; violet

Item No.: 248-501
Mini-WSB marking card; as card; not stretchable; plain; snap-on type; white

Item No.: 248-501/000-002
Mini-WSB marking card; as card; not stretchable; plain; snap-on type; yellow

1.1.2.3 Marker carrier

Item No.: 750-103
Group marker carrier

1.1.3 Shield termination

1.1.3.1 Shield clamping saddles

Item No.: 790-108
Shield clamping saddle; 11 mm wide; diameter of compatible conductor; 3 ... 8 mm

Item No.: 790-208
Shield clamping saddle; 12.4 mm wide; 3 ... 8 mm

Item No.: 790-116
Shield clamping saddle; 19 mm wide; diameter of compatible conductor; 7 ... 16 mm

Item No.: 790-216
Shield clamping saddle; 21.8 mm wide; 6 ... 16 mm

Item No.: 790-124
Shield clamping saddle; 27 mm wide; diameter of compatible conductor; 6 ... 24 mm

Item No.: 790-220
Shield clamping saddle; 30 mm wide; 6 ... 20 mm

Item No.: 790-140
Shield clamping saddle; diameter of compatible conductor

 Continued on next page

1.1.4 Supply module

1.1.4.1 Supply module

Item No.: 750-606
Power Supply; 24 VDC; Diagnostics; Intrinsically safe

Item No.: 750-625/000-001
Power Supply; 24 VDC; Intrinsically safe