PART #	QUOTE #	DESCRIPTION	LENGTH "A"	PLUG #	RECEPTACLE #
1301370352	T201738622-5	DROP CORD, FD BOX, F3 MAX-LOC, PLUG, 6.56'	6.56 FEET (2 METERS)	26T47	60W33DPLX
1301370357	T201844263-3	DROP CORD, FD BOX, F3 MAX-LOC, WATERTITE PLUG, 17' 6"	17 FEET 6 INCH	26W47	60W33DPLX
1301370358	T201844299-9	DROP CORD, FD BOX, F3 MAX-LOC, PLUG, 15' 5"	15 FEET 5 INCH	26T47	60W33DPLX
1301370359	T201844299-10	DROP CORD, FD BOX, L6-20R, F3 MAX-LOC, PLUG, 15' 5"	15 FEET 5 INCH	26T48	67W48

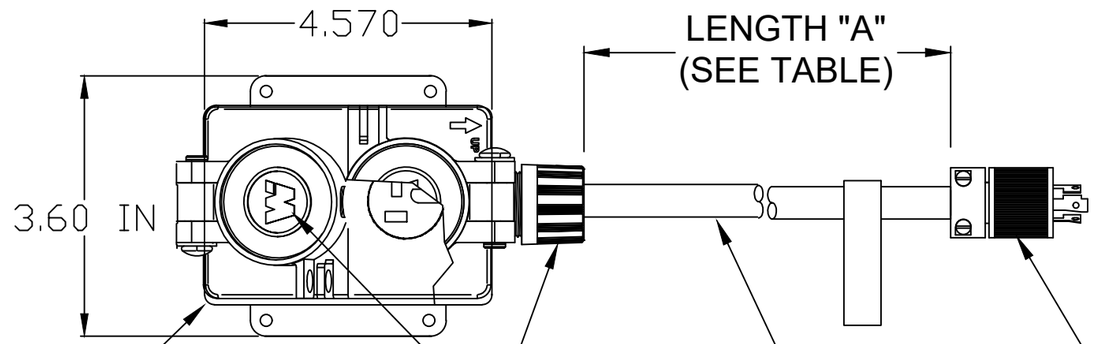

FD BOX
GLASS-FILLED
POLYESTER
YELLOW
P/N 453CR

20A/125V
5-20R DUPLEX
RECEPTACLE
NYLON SHOWN
SEE TABLE

F3 MAX-LOC
STRAIN RELIEF
CONNECTOR

#12-3 SOW
CORD
BLACK

20A 125V
L5-20P PLUG
NYLON
P/N 26T47 SHOWN
SEE TABLE

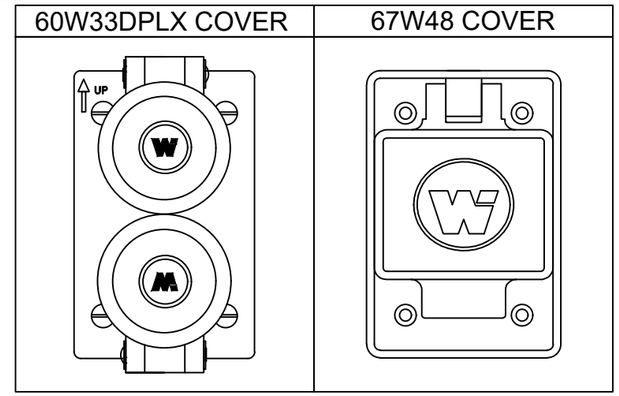

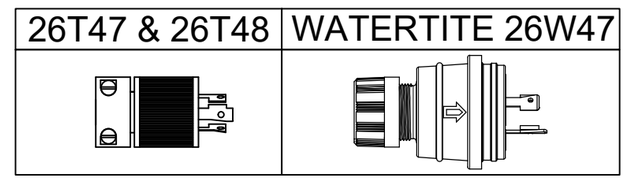

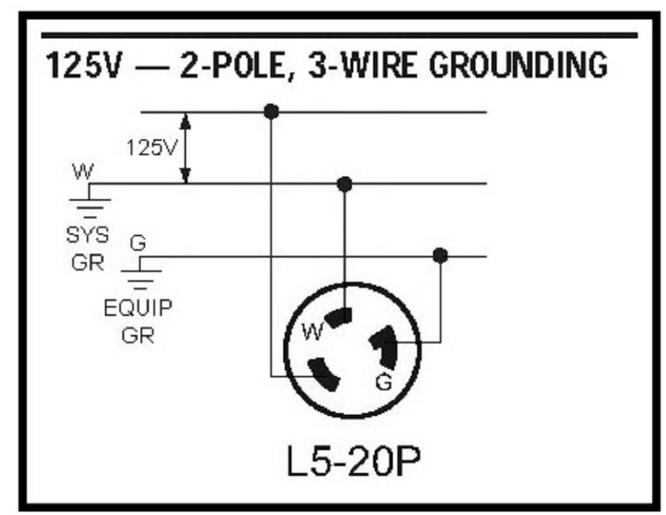

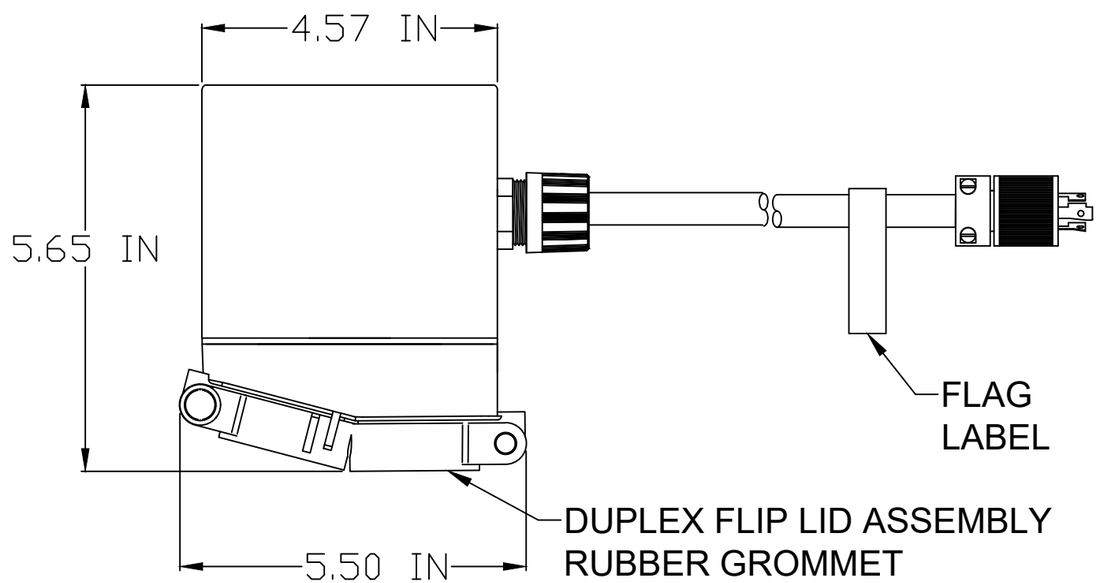

FLAG
LABEL

DUPLEX FLIP LID ASSEMBLY
RUBBER GROMMET
& POLYCARBONATE LID
YELLOW
P/N 60W33DPLX SHOWN
SEE TABLE

DOCUMENT STATUS	P1	RELEASE DATE	2022/03/30 09:51:24

FORMAT: IN-ACAD-tb-prod-B
REVISION: B
DATE: 2020/01/14

FUNCTIONAL SYMBOLS: FA=0, FC=0, FP=0
DIVISIONAL SYMBOLS

THIS DRAWING CONTAINS INFORMATION THAT IS PROPRIETARY TO MOLEX ELECTRONIC TECHNOLOGIES, LLC AND SHOULD NOT BE USED WITHOUT WRITTEN PERMISSION

DIMENSION UNITS: INCH
SCALE: NTS

GENERAL TOLERANCES (UNLESS SPECIFIED)

	mm	INCH
4 PLACES	±----	±----
3 PLACES	±----	±----
2 PLACES	±----	±----
1 PLACE	±----	±----
0 PLACES	±----	±----
ANGULAR TOL ±	---- °	

DRAFT WHERE APPLICABLE MUST REMAIN WITHIN DIMENSIONS

CURRENT REV DESC: REMOVED OBSOLETED PART NUMBER AS PER PCN#509987.

EC NO: 693623
DRWN: SANTHN 2021/11/22
CHK'D: SANTHN 2021/12/28
APPR: GGA 2022/03/30

INITIAL REVISION:
DRWN: WLEUNG 2016/11/16
APPR: HKNEELAN 2016/11/28

THIRD ANGLE PROJECTION | DRAWING: B-SIZE | SERIES: 130137 | MATERIAL NUMBER: SEE TABLE | CUSTOMER: RUBB BLDG SYS KENTUCKY | SHEET NUMBER: 1 OF 1

molex

DROP CORD - 1 PHASE
FD BOX #12-3 CORD, PLUG

PRODUCT CUSTOMER DRAWING

DOCUMENT NUMBER	DOC TYPE	DOC PART	REVISION
1301370327	PSD	001	D