ASSEMBLY P/N	TOTAL NUMBER OF SIGNAL CONTACTS	DIM "A"	DIM "B"	DIM "H"
73771-02**	72	31.6	22.00	6.05
73771-03**	72	31.6	22.00	10.05
73771-11**	144	55.6	46.00	15.05
73771-12**	144	55.6	46.00	6.05
73771-13**	144	55.6	46.00	10.05

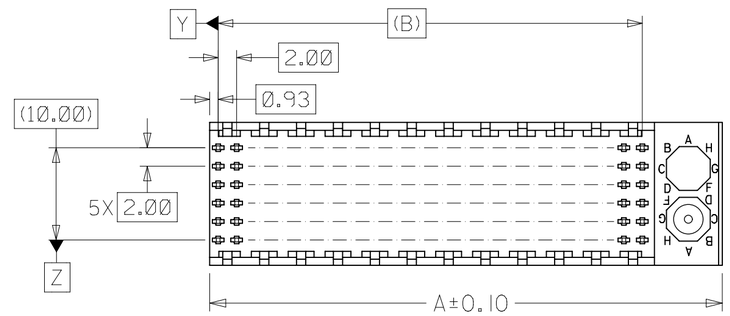

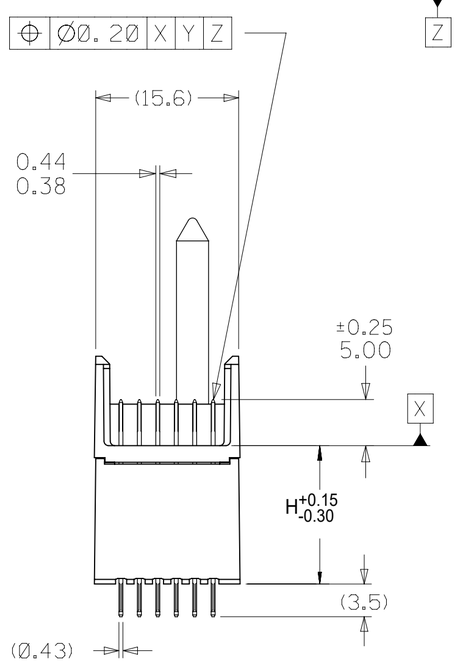

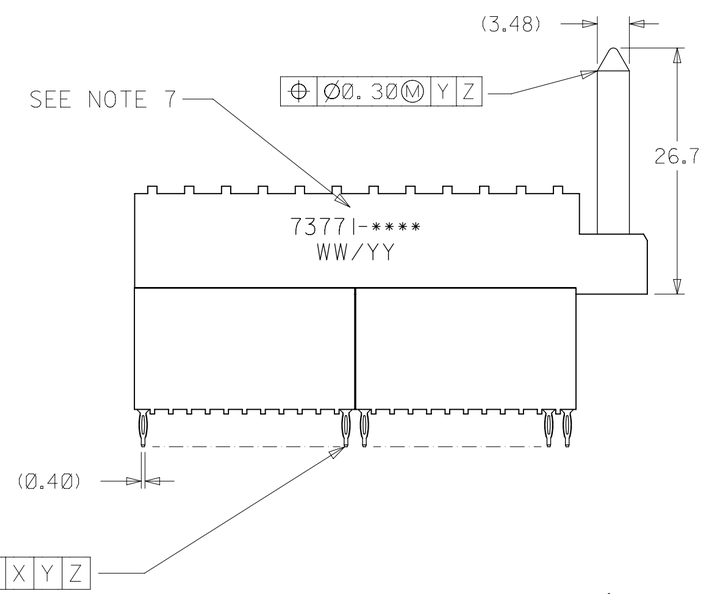

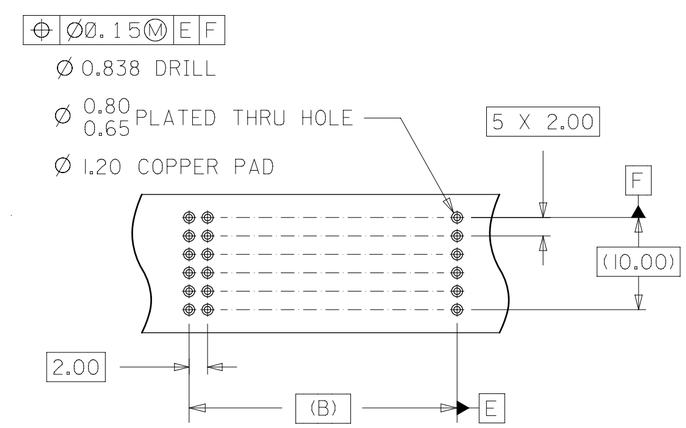

BACKPLANE HOLE PATTERN

NOTES:

1. MATERIALS: HOUSING-LIQUID CRYSTAL POLYMER (LCP), GLASS FILLED, UL 94V-0, COLOR: BLACK, TERMINAL-PHOSPHOR BRONZE
2. FINISH: SELECTIVE GOLD (Au) IN CONTACT AREA, 0.00076 mm MINIMUM THICKNESS: SELECTIVE MATTE TIN (Sn) ON TAILS, NICKEL (Ni) OVERALL.
3. THIS PART CONFROMS TO MOLEX PRODUCT SPECIFICATION PS-73780-999.
4. THIS PART CONFORMS TO COSMETIC SPECIFICATION PS-45499-002 CLASS C.
5. RECOMMENDED PCB THICKNESS: 2.50 MIN.
6. PACKAGE PER PK-70873-0870, PK-70873-0871 OR PK-70873-0875.
7. PART MARKED WITH PART NUMBER AND DATE CODE APPROXIMATELY WHERE SHOWN.

PRE-RELEASE REFERENCE USE ONLY

THIS DRAWING CONTAINS INFORMATION THAT IS PROPRIETARY TO MOLEX ELECTRONIC TECHNOLOGIES, LLC AND SHOULD NOT BE USED WITHOUT WRITTEN PERMISSION

DIMENSION UNITS	SCALE
mm	2:1

GENERAL TOLERANCES (UNLESS SPECIFIED)

	MM	INCH
4 PLACES	±	±
3 PLACES	±	±
2 PLACES	± 0.05	±
1 PLACE	± 0.1	±
0 PLACES	±	±
ANGULAR TOL	± 0.5 °	

DRAFT WHERE APPLICABLE MUST REMAIN WITHIN DIMENSIONS

CURRENT REV DESC: REMOVED OBSOLETED PART NUMBER AS PER PCN#511698.

EC NO: 742551
DRWN: SANTHN 2023/03/30
CHK'D: GGA 2023/05/12
APPR: GGA 2023/05/12

INITIAL REVISION:
DRWN: JBINGHAM 1997/03/07
APPR: CBIXLER 1997/03/07

THIRD ANGLE PROJECTION | DRAWING: C-SIZE | SERIES: 73771

molex

SALES ASSEMBLY HDM
BACKPLANE STACKING MOD CLOSED END OPT PRESSFIT

PRODUCT CUSTOMER DRAWING

DOCUMENT NUMBER	DOC TYPE	DOC PART	REVISION
SD-73771-001	PSD	001	J

MATERIAL NUMBER	CUSTOMER	SHEET NUMBER
SEE TABLE	GENERAL MARKET	1 OF 2

DOCUMENT STATUS	P1	RELEASE DATE	2023/05/12 06:17:04

FORMAT: Eng-lega-master-B-prod-C
REVISION: E1
DATE: 2021/05/01

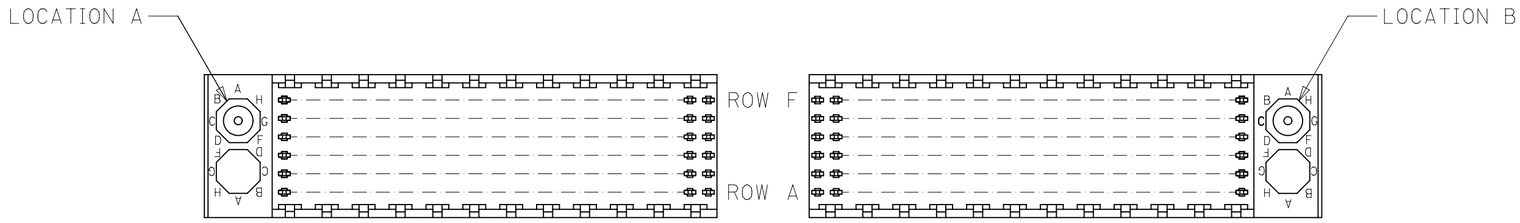

REF. MATERIAL NUMBER 73771-1100
GUIDE PIN IS IN LOCATION A

REF. MATERIAL NUMBER 73771-1101
GUIDE PIN IS IN LOCATION B

MATERIAL NUMBER ASSIGNMENT

73771- * * * *

0 = 72-CIRCUIT
1 = 144-CIRCUIT

1 = 15.05 STACKING HEIGHT
2 = 6.05 STACKING HEIGHT
3 = 10.05 STACKING HEIGHT

NUMBER	GUIDE POST LOCATION
00	A
01	B
02	N/A

PRE-RELEASE REFERENCE USE ONLY

THIS DRAWING CONTAINS INFORMATION THAT IS PROPRIETARY TO MOLEX ELECTRONIC TECHNOLOGIES, LLC AND SHOULD NOT BE USED WITHOUT WRITTEN PERMISSION

DIMENSION UNITS	SCALE
mm	1:1

GENERAL TOLERANCES (UNLESS SPECIFIED)

	MM	INCH
4 PLACES	±	±
3 PLACES	±	±
2 PLACES	± 0.05	±
1 PLACE	± 0.1	±
0 PLACES	±	±
ANGULAR TOL	± 0.5 °	

DRAFT WHERE APPLICABLE MUST REMAIN WITHIN DIMENSIONS

CURRENT REV DESC: REMOVED OBSOLETED PART NUMBER AS PER PCN#511698.

EC NO: 742551
DRWN: SANTHN 2023/03/30
CHK'D: GGA 2023/05/12
APPR: GGA 2023/05/12

INITIAL REVISION:
DRWN: JBINGHAM 1997/03/07
APPR: CBIXLER 1997/03/07

THIRD ANGLE PROJECTION | DRAWING: C-SIZE | SERIES: 73771

molex

SALES ASSEMBLY HDM
BACKPLANE STACKING MOD CLOSED END OPT
PRESSFIT

PRODUCT CUSTOMER DRAWING

DOCUMENT NUMBER	DOC TYPE	DOC PART	REVISION
SD-73771-001	PSD	001	J

MATERIAL NUMBER	CUSTOMER	SHEET NUMBER
SEE TABLE	GENERAL MARKET	2 OF 2

DOCUMENT STATUS	P1	RELEASE DATE	2023/05/12 06:17:04

FORMAT: Eng-legs-master-lb-prod-C
REVISION: E1
DATE: 2021/05/01