MAT'L NO.	ENG NO.	STUD SIZE	∅"S" ±.010 (0.25)
191640069	SC-241-06	6	.146 (3.71)
191640070	SC-241-08	8	.173 (4.39)
191640071	SC-241-10	10	.198 (5.03)

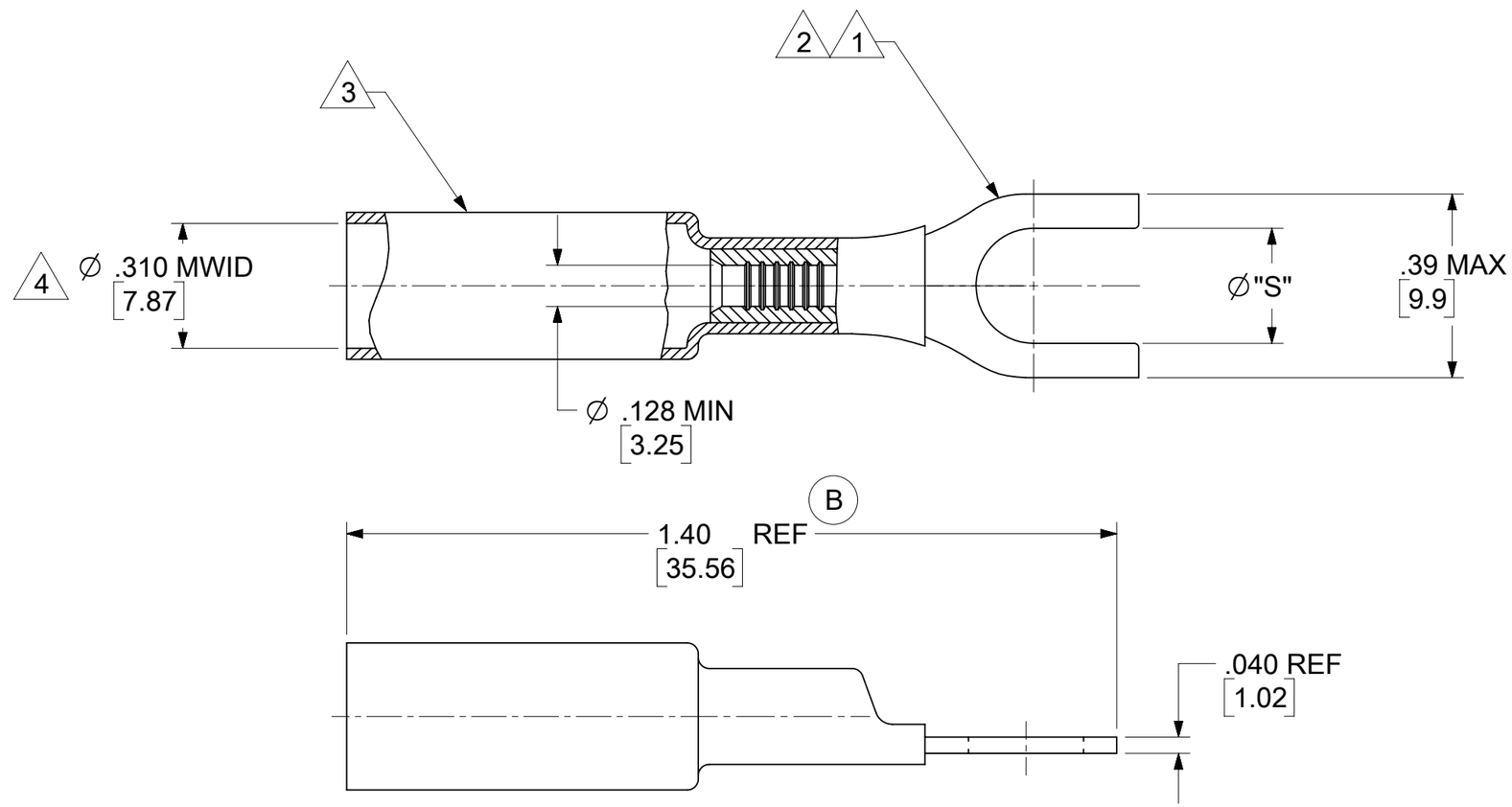

NOTE(S):

1. TERMINAL MATERIAL: COPPER ALLOY
2. FINISH: ELCTRO TIN PLATE
3. INSULATION MATERIAL: HEAT SHRINKABLE TUBING WITH HOTMELT ADHESIVE INNER LINER. COLOR: YELLOW
4. MWID = MAXIMUM WIRE INSULATION DIAMETER.
5. PARTS ARE RoHS COMPLIANT.

THIS DRAWING CONTAINS INFORMATION THAT IS PROPRIETARY TO MOLEX ELECTRONIC TECHNOLOGIES, LLC AND SHOULD NOT BE USED WITHOUT WRITTEN PERMISSION

FUNCTIONAL SYMBOLS: F/A = 0, F/C = 0, F/P = 0

DIVISIONAL SYMBOLS

DIMENSION UNITS	SCALE
INCH/MM	NTS

GENERAL TOLERANCES (UNLESS SPECIFIED)

	MM	INCH
4 PLACES	±	±
3 PLACES	±	±
2 PLACES	±	±
1 PLACE	±	±
0 PLACES	±	±
ANGULAR TOL	± °	

DRAFT WHERE APPLICABLE MUST REMAIN WITHIN DIMENSIONS

CURRENT REV DESC: DIM WAS MAX

EC NO: 803695
DRWN: DEANNM1 2024/11/05
CHK'D: ETHRODAHL 2024/11/11
APPR: ETHRODAHL 2024/11/11

INITIAL REVISION:
DRWN:
APPR:

THIRD ANGLE PROJECTION | DRAWING: B-SIZE | SERIES: 19164

molex

SPADE TONGUE TERMINAL
PERMA-SEAL 12-10 AWG

PRODUCT CUSTOMER DRAWING

DOCUMENT NUMBER	DOC TYPE	DOC PART	REVISION
SD-19164-048	PSD	001	B

MATERIAL NUMBER	CUSTOMER	SHEET NUMBER
	GENERAL MARKET	1 OF 1

DOCUMENT STATUS	P1	RELEASE DATE	2024/11/11 14:29:00

FORMAT: Eng-lega-mech-prod-B
REVISION: E1
DATE: 2021/05/01