© – TE Connectivity. All Rights Reserved.

REVISIONS					
P	LTR	DESCRIPTION	DATE	DWN	APVD
	R5	REVISED PER ECR-25-255998	15SEP2025	SA	DSC

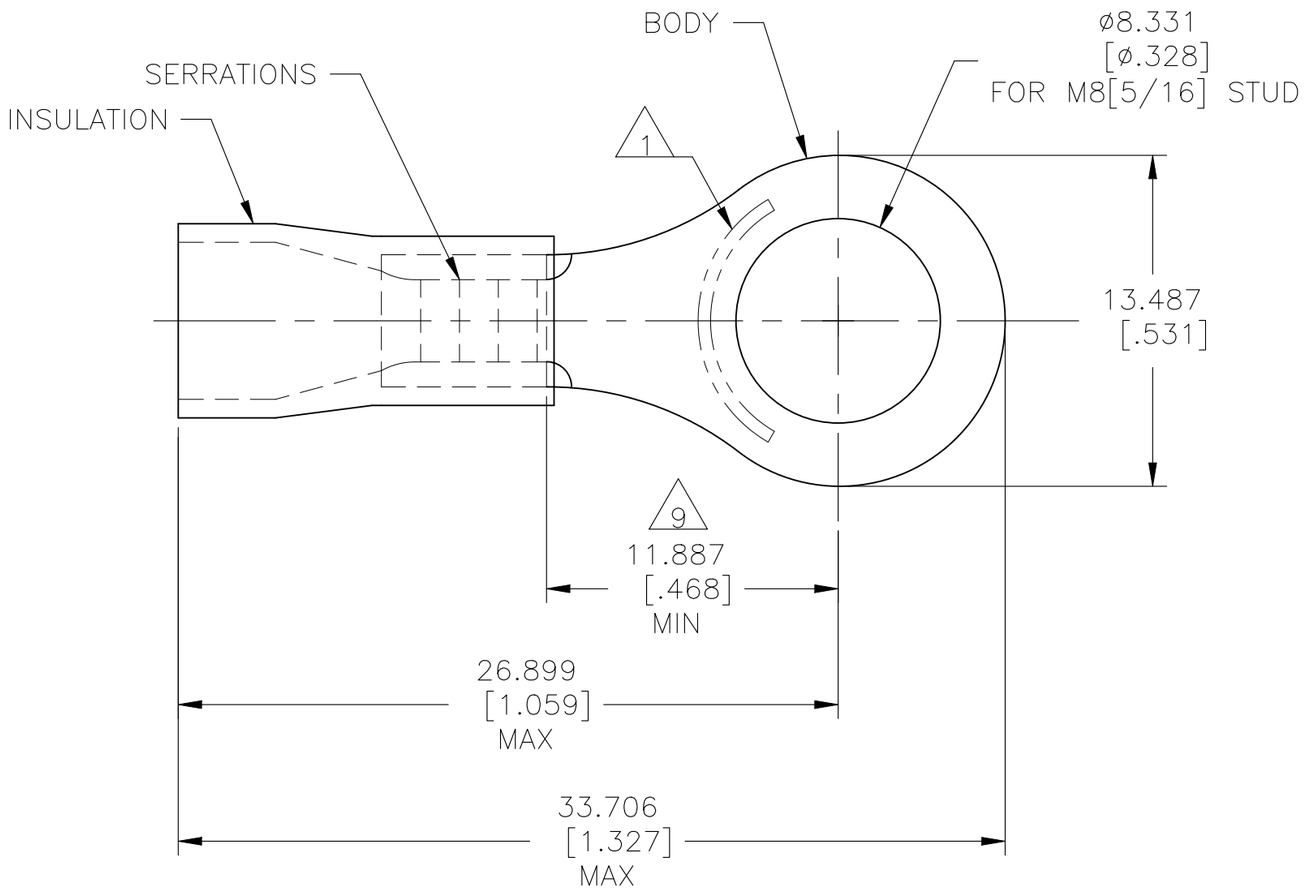

AMP WIRE RANGE	Listed	LR7189 Certified
12–10 AWG SOLID OR STRANDED	12–10 AWG SOLID OR STRANDED	12–10 AWG SOLID OR STRANDED

1. STAMP AMP 12–10*, APPROX AS SHOWN
2. WIRE INSULATION DIA: ø3.810–ø6.350[ø.150–ø.250]
3. BODY MATERIAL THK IS 1.016±0.051[.040±.002]
4. MATERIAL: BODY: COPPER PER ASTM B152
   INSULATION: PVC
5. NOTE DELETED
6. NOTE DELETED
7. FINISH:
   BODY: TIN PL. PER ASTM B545
   INSULATION: COLOR– YELLOW
8. NOTE DELETED
9. APPLIES FROM CENTER OF STUD HOLE TO EDGE OF METAL WIRE BARREL

QTY	PACKAGE TYPE	PART NO
50	LOOSE PIECE, BOX	8–34856–2
1 KIT = 100 PIECES	LOOSE PIECE	6–34856–0
2500	ON TAPE, REEL	2–34856–1
500	LOOSE PIECE	34856

AMP INCORPORATED
CUSTOMER SERVICE SYSTEMS

FOR ADDITIONAL PRODUCT INFORMATION OR COPIES OF DRAWINGS AND TECHNICAL DOCUMENTS	PRODUCT INFORMATION CENTER 1–800–522–6752
FOR APPLICATION TOOLING INFORMATION	TOOLING ASSISTANCE CENTER 1–800–722–1111
FOR ORDER ENTRY	1–800–526–5142

THIS DRAWING IS A CONTROLLED DOCUMENT FOR AMP INCORPORATED. IT IS SUBJECT TO CHANGE AND THE CONTROLLING ENGINEERING ORGANIZATION SHOULD BE CONTACTED FOR THE LATEST REVISION.

MAX RECOMMENDED OPERATING TEMPERATURE: 105°C [221°F]

VOLTAGE RATING: N/A

CIRCULAR MIL AREA: 2.62–6.64mm² [5180–13100] SOLID OR STRANDED

THIS DRAWING IS A CONTROLLED DOCUMENT.

DIMENSIONS: mm [INCHES]

TOLERANCES UNLESS OTHERWISE SPECIFIED:

0 PLC	± –
1 PLC	± –
2 PLC	± –
3 PLC	± 0.127[.005]
4 PLC	± –
ANGLES	± –

MATERIAL 4

FINISH 7

DWN	DK SCHRUM	08/06/92
CHK	RE HERSEY	11/10/92
APVD	M ELLIS	11/10/92
PRODUCT SPEC	UL 486 A–B	
APPLICATION SPEC	114–2161	
WEIGHT		

TE Connectivity

NAME: TERMINAL, RING TONGUE, PLASTI–GRIP, WIRE SIZE: 12–10 AWG

SIZE	CAGE CODE	DRAWING NO	RESTRICTED TO
A3	00779	C–34856	—

CUSTOMER DRAWING | SCALE 4:1 | SHEET 1 OF 1 | REV R5

1470–19 (1/15)