LOOSE PIECE		TAPE MOUNTED		SPECIFICATIONS						
MATERIAL NUMBER	ENGINEERING NUMBER	MATERIAL NUMBER	ENGINEERING NUMBER	STUD SIZE	"S" ±.005 [0.13]	"W"	"C" MIN.	"E" MAX.	"L" MAX.	"H"
191930254	F-366-10	---	---	10	.198 [5.03]	.665±.013 [16.89±0.33]	.520 [13.21]	1.028 [26.11]	1.385 [35.18]	1.172 [29.77]
191930258	F-366-12	---	---	12	.515 [13.08]					
191930261	F-366-14	191930263	F-366-14T	14	.265 [6.73]					
191930264	F-366-38	191930266	F-366-38T	38	.390 [9.91]					
191930267	F-366-56	191930269	F-366-56T	56	.328 [8.33]					
191930270	F-366-76	---	---	76	.453 [11.51]					
191930273	F-367-10	191930274	F-367-10T	10	.198 [5.03]	.475±.010 [12.06±0.25]	.520 [13.21]	1.028 [26.11]	1.288 [32.72]	1.172 [29.77]
191930275	F-367-14	191930277	F-367-14T	14	.265 [6.73]					
191930278	F-367-56	---	---	56	.328 [8.33]					
191930281	F-369-12	---	---	12	.515 [13.08]	.885±.010 [22.48±0.25]	.989 [25.12]	1.497 [38.02]	1.970 [50.04]	---
191930282	F-369-14	---	---	14	.265 [6.73]					
191930283	F-369-38	---	---	38	.390 [9.91]					
191930284	F-369-56	---	---	56	.328 [8.33]					
191930285	F-369-58	---	---	58	.656 [16.66]					
191930286	F-369-76	---	---	76	.453 [11.51]					
191930287	F-370-12	---	---	12	.515 [13.08]	1.260±.010 [32.00±0.25]	.989 [25.12]	1.497 [38.02]	2.158 [54.81]	---
191930288	F-370-14	---	---	14	.265 [6.73]					
191930289	F-370-34	---	---	34	.781 [19.84]					
191930291	F-370-38	---	---	38	.390 [9.91]					
191930292	F-370-56	---	---	56	.328 [8.33]					
191930293	F-370-58	---	---	58	.656 [16.66]					
191930294	F-370-76	---	---	76	.453 [11.51]					

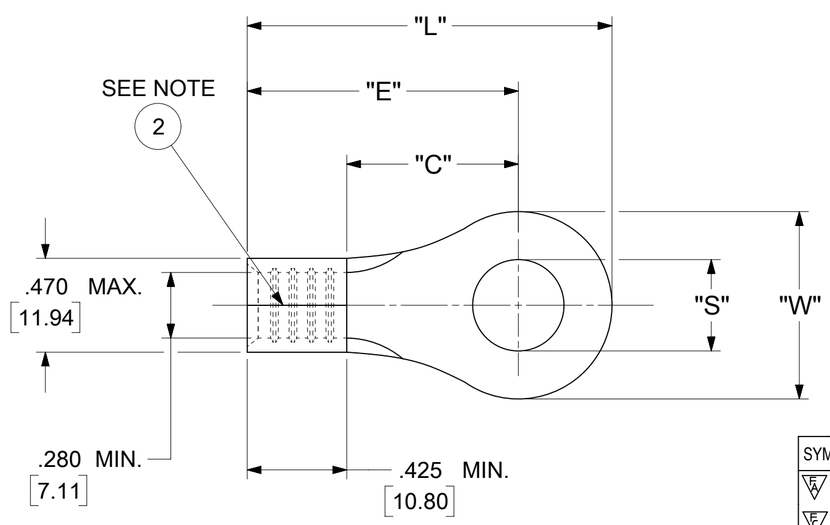

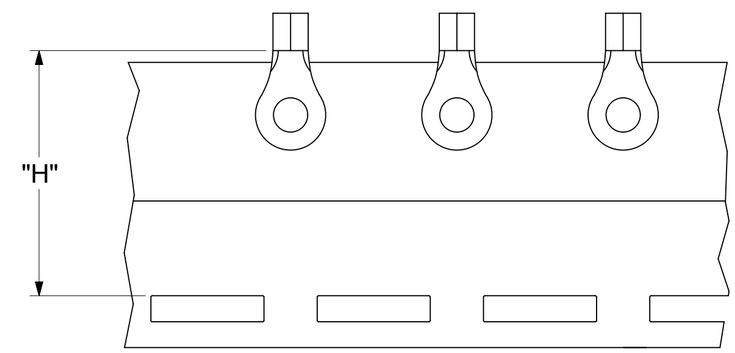

PARTS ON TAPE

NOTES:

1. MATERIAL: COPPER
   PLATING: ELECTRO-TIN (.0003 MIN).
2. BRAZED SEAM
3. WIRE SIZE: 4 AWG
   25 MM²
4. "UL" LISTING #E32244
   "CSA" LISTING #18689
5. ALL DIMENSIONS IN INCHES/[MM].
6. PARTS ARE ROHS COMPLIANT.
7. DIMS. SHOWN ARE FOR REFERENCE ONLY.

DOCUMENT STATUS	P1	RELEASE DATE	2019/08/06 14:51:04

SYMBOLS: A = 0; C = 0; B = 0; S = 0; = 0; C = 0; = 0; = 0; = 0

THIS DRAWING CONTAINS INFORMATION THAT IS PROPRIETARY TO MOLEX ELECTRONIC TECHNOLOGIES, LLC AND SHOULD NOT BE USED WITHOUT WRITTEN PERMISSION

DIMENSION UNITS: INCH/MM
SCALE: NTS

GENERAL TOLERANCES (UNLESS SPECIFIED)

	MM	INCH
4 PLACES	± ---	± ---
3 PLACES	± ---	± .005
2 PLACES	± 0.13	± .01
1 PLACE	± 0.25	± ---
0 PLACES	± ---	± ---
ANGULAR TOL	± 0.5 °	

DRAFT WHERE APPLICABLE MUST REMAIN WITHIN DIMENSIONS

CURRENT REV DESC: MIGRATION TO ECTR/NX

EC NO: 620820
DRWN: ABENJAMINLW 2019/07/09
CHK'D: GROJAS01 2019/07/17
APPR: JMACNEIL 2019/08/06

INITIAL REVISION:
DRWN: LEM 1970/03/02
APPR: JMACNEIL 2019/08/06

THIRD ANGLE PROJECTION | DRAWING: C-SIZE | SERIES: 19193

molex

RING TONGUE TERMINAL
VERSAKRIMP

PRODUCT CUSTOMER DRAWING

DOCUMENT NUMBER	DOC TYPE	DOC PART	REVISION
191930254	PSD	000	A

MATERIAL NUMBER	CUSTOMER	SHEET NUMBER
SEE TABLE	GENERAL MARKET	1 OF 1

FORMAT: Eng-tega-master-tb-prod-C
REVISION: D
DATE: 2018/01/18