© – TE Connectivity. All Rights Reserved.

REVISIONS					
P	LTR	DESCRIPTION	DATE	DWN	APVD
	E4	REVISED PER ECR-24-219996	20JAN2025	RK	MDG

PROJECT NR.: 90-52004

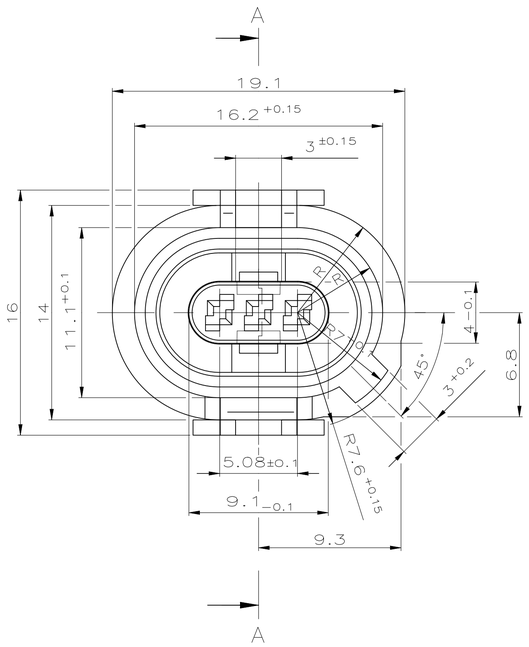

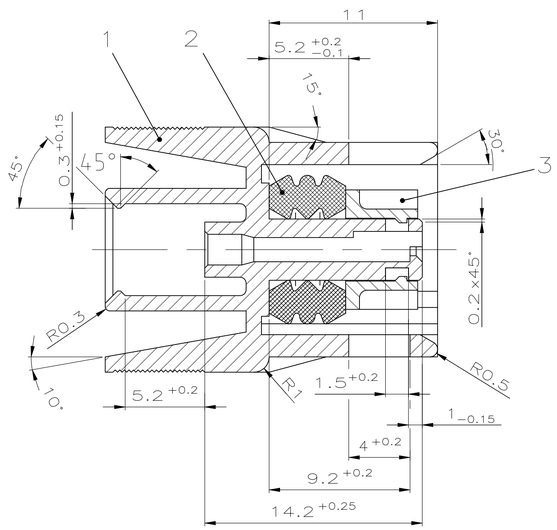

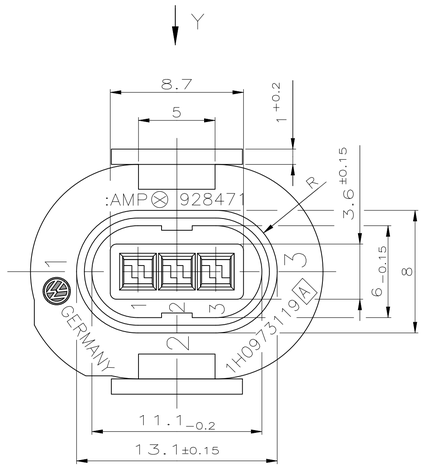

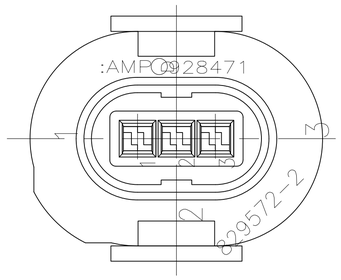

neutrale Version

928471–1

928471–2

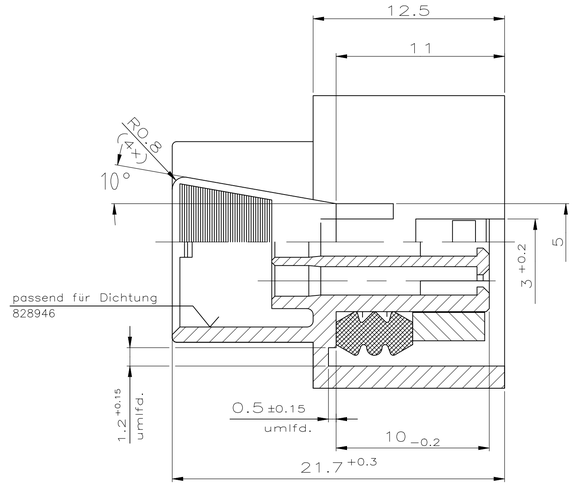

Sicherungshülse

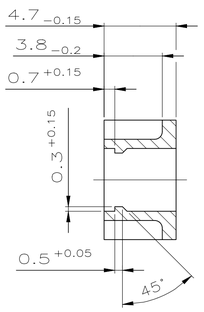

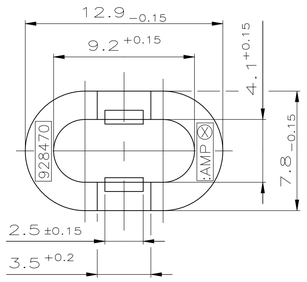

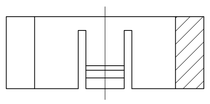

Ansicht X 2:1
VIEW

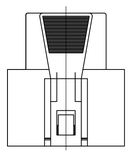

Ansicht Y 2:1
VIEW

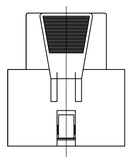

Dichtung

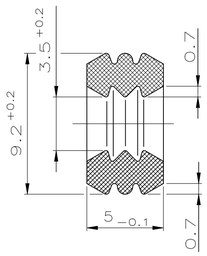

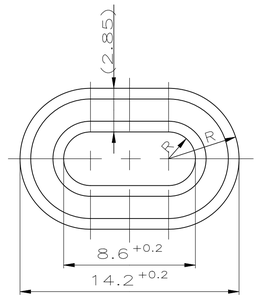

OBSOLETE	–	~~829572-2~~	E	RETAINING RING	PA66-GF	BLACK	1	3
				SEALING	SILICON	ORANGE	1	2
				HOUSING	PA66-GF	BLACK	1	1
E3	1H0 973 117 A	829572-1	E	RETAINING RING	PA66-GF	BLACK	1	3
				SEALING	SILICON	ORANGE	1	2
				HOUSING	PA66-GF	BLACK	1	1
	VW PART NO	AMP PART NO	REV.	DESCRIPTION	MATERIAL	SURFACE COLOR	QTY.	ITEM NO

THIS DRAWING IS A CONTROLLED DOCUMENT.

DWN S.Schelhorn 05.11.96
CHK R.Nebe 05.11.96
APVD –
PRODUCT SPEC –
APPLICATION SPEC –
WEIGHT –

DIMENSIONS: mm

TOLERANCES UNLESS OTHERWISE SPECIFIED: 0.2 mm
0 PLC ± –
1 PLC ± –
2 PLC ± –
3 PLC ± –
4 PLC ± –
ANGLES ± 2°

MATERIAL: SEE TABLE
FINISH: SEE TABLE

TE Connectivity

NAME: MODU RECEPTACLE HOUSING, 3POSITION, ASSEMBLY
–
MODU BUCHSENGEHAEUSE, 3POLIG, KOMPLETT

SIZE	CAGE CODE	DRAWING NO	RESTRICTED TO
A1	00779	C-829572	–

CUSTOMER DRAWING | SCALE 5:1 | SHEET 1 OF 1 | REV E4

4805 (1/15)