## TABLE OF CONTENTS


| SHEET NO. | SHEET DESCRIPTION |
|---|---|
| 1 | NOTES AND BOM |
| 2 | CONFIGURATIONS |
| 3-4 | KEY CONFIGURATIONS |
| 5 | RECEPTACLE CONNECTOR ASSEMBLY |
| 6 | BACKSHELL NOTES |
| 7 | BACKSHELL |
| 8 | BACKSHELL CONFIGURATIONS |


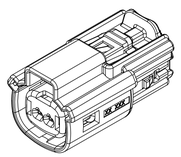

1x2

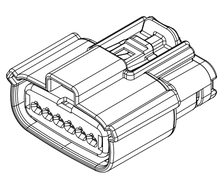

1x6

NOTES: VALID UNLESS OTHERWISE SPECIFIED

1. GENERAL:
a. APPLICATION SPECIFICATION SEE: AS-33472-100
-CONTAINS: PRODUCT INTRODUCTION, PRODUCT SUMMARY, CONNECTOR ASSEMBLY, PACKAGING INFORMATION, CONNECTOR MATING, SERVICE INSTRUCTIONS, ELECTRICAL CONTINUITY CHECKING, CRIMPING, AND TROUBLESHOOTING.
-DESIGNED TO MATE WITH DEVICE OR CONNECTOR AS SPECIFIED IN THE MATING INTERFACE/CONNECTOR DRAWINGS CHART.
*DENOTES DRAWINGS THAT CAN BE ACCESSED AT <http://ewcap.uscarteams.org/>.
-ASSEMBLY SHIPPED WITH PLR IN PRE-LOCK POSITION (SEE PLR PRE-LOCK VIEW SHEET 5).
b. PRODUCT SPECIFICATION SEE:
-STANDARD CONFIGURATION: PS-33471-000
-UL V0 CONFIGURATION: PS-160105-0001
CONTAINS: PRODUCT INTRODUCTION, PRODUCT SUMMARY, RATINGS (CURRENT, TEMPERATURE, SEALING, AND FLAMMABILITY), TERMINALS, WIRE DIAMETER RANGE, PRODUCT VALIDATION, AND PRODUCT DEVIATIONS.
c. PACKAGING SPECIFICATION PER MOLEX DRAWING: SEE PACKAGING CHART
d. PARTS MUST BE IN COMPLIANCE TO MOLEX CHEMICAL SUBSTANCES FOR PRODUCTS AND PACKAGING SPECIFICATION: QEHS-699000-301
e. DATA MUST BE SUBMITTED UNDER THE MOLEX PART NUMBER TO IMDS (COMPANY ID#13255)

2. DESIGN - MATERIALS:
A2 a. FOR BILL OF MATERIALS SEE:
-STANDARD CONFIGURATION TBD
-UL V0 CONFIGURATION SD-160105-0002

3. DESIGN - GEOMETRY:
a. THE 3-D CAD DATA IS BASIC (WITHOUT TOLERANCE) AND MASTER FOR THIS PART WITH THE EXCEPTION OF UNDERLINED DIMENSIONS. DIMENSIONAL INFORMATION NOT SHOWN ON THIS DRAWING IS DEFINED BY THE DATA FILE AT ITS LATEST REVISION.
b. GEOMETRIC DIMENSIONS AND TOLERANCES PER ASME Y14.5M-2009
c. EDGES AND UNDIMENSIONED DETAILS PER ISO13715
d. CORNERS SHOWN AS SHARP TO BE R 0.2 MAX.
e. LETTERING SHALL BE 0.15 MAX RAISED IN 0.25 MAX RECESS PAD. THIS INCLUDES RECYCLING CODE, CAVITY ID, VENDOR IDENTIFICATION, AND CUSTOMER MATERIAL NUMBER.
f. VISUAL DEFECTS SHALL MEET COSMETIC STANDARD PS-45499-002 (Class B).
g. LASER MARKING:
1. PART NUMBER
2. DAY OF THE YEAR
3. SHIFT
4. YEAR
FOR ADDITIONAL INFORMATION SEE SECTION 5 UNDER PROCEDURES IN ES-34735-008.

## PACKAGING

| DESCRIPTION | DRAWING NO. |
|---|---|
| 1X2 | PK-31300-635 |
| | |
| | |
| | |
| 1X6 | PK-31300-903 |

## MATING INTERFACE/CONNECTOR DRAWINGS

| DESCRIPTION | INTERFACE DEFINITION | MOLEX INLINE |
|---|---|---|
| 1X2 | *150-S-002-1-Z05 | SD-33481-0001 |
| | | |
| | | |
| | | |
| 1X6 | *150-S-006-1-Z03 | SD-33481-0001 |

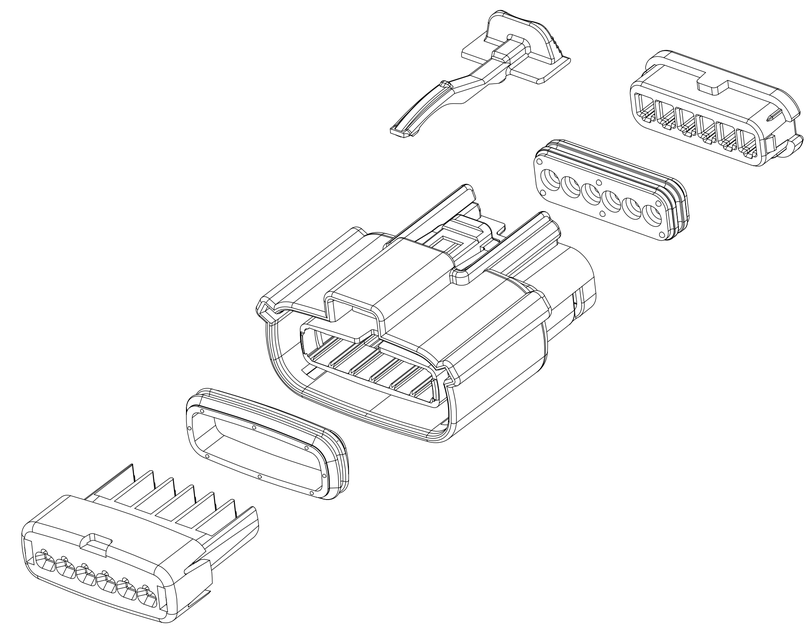

| REV | REV DESCRIPTION |
|---|---|
| A3 | ADDED MID-VOLT VIEWS ON SHEET 2 |
| A2 | CHANGE STANDARD CONFIGURATION TO TBD SEE NOTES 2.a |
| A1 | UPDATED THE DRAWING FRAME |
| A | MINOR GEOMETRY CHANGE FOR UL V0 |
| 2 | UPDATE VIEWSETS |
| 1 | INITIAL RELEASE |

INSPECTION NUMBER LOG
LAST NUMBER: 11
ADDED: 11
REMOVED:

THIS DRAWING CONTAINS INFORMATION THAT IS PROPRIETARY TO MOLEX ELECTRONIC TECHNOLOGIES, LLC AND SHOULD NOT BE USED WITHOUT WRITTEN PERMISSION

FUNCTIONAL SYMBOLS: FA = 0, FC = 0, FD = 0
DIVISIONAL SYMBOLS

| DIMENSION UNITS | SCALE |
|---|---|
| MM | 1.5:1 |

| GENERAL TOLERANCES (UNLESS SPECIFIED) | |
|---|---|
| ANGULAR TOL | ± 1° |
| 4 PLACES | ± |
| 3 PLACES | ± |
| 2 PLACES | ± 0.100 |
| 1 PLACE | ± 0.20 |
| 0 PLACES | ± |

DRAFT WHERE APPLICABLE MUST REMAIN WITHIN DIMENSIONS

CURRENT REV DESC: ADDED NEW VIEWS

STATUS: Production
DRWN: Yu Chao Fu 2023-04-17
CHK'D: Tom Smith 2025-10-28
APPR: Andy Proffitt 2025-10-28

THIRD ANGLE PROJECTION | DRAWING: D-SIZE | SERIES: 33471

molex

MX150 RCPT
SINGLE ROW SEALED ASSY MAT SEAL

PRODUCT CUSTOMER DRAWING

| DOCUMENT NUMBER | DOC TYPE | DOC PART | REVISION |
|---|---|---|---|
| SD-33471-0001 | PSD | 001 | A3 |

| MATERIAL NUMBER | CUSTOMER | SHEET NUMBER |
|---|---|---|
| SEE NOTE 2a | GENERAL MARKET | 1 OF 8 |

FORMAT TLCandrd07
REVISION: B
DATE: 2020/08/31

# SHEET DESCRIPTION

CONFIGURATIONS

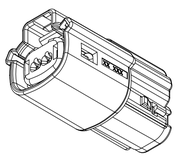

1x2 - STD

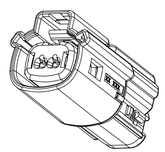

1x2 - UL V0*

A3

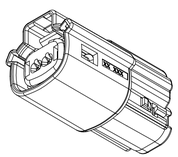

1x2 - MID-VOLT

A3

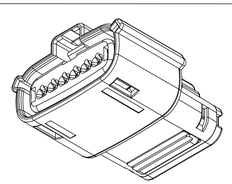

1x6 - MID-VOLT

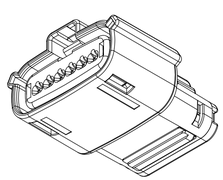

1x6 - STD

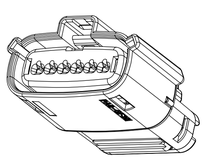

1x6 - UL V0*

*MINOR GEOMETRY DIFFERENCE THAN STANDARD CONFIGUATION
SEE NOTES 1 & 2 FOR MORE INFORMATION

| | | | |
|---|---|---|---|
| FUNCTIONAL SYMBOLS | THIS DRAWING CONTAINS INFORMATION THAT IS PROPRIETARY TO MOLEX ELECTRONIC TECHNOLOGIES, LLC AND SHOULD NOT BE USED WITHOUT WRITTEN PERMISSION | | |
| FA = 0 | DIMENSION UNITS: MM | SCALE: 1.5:1 | CURRENT REV DESC: ADDED NEW VIEWS |
| FC = 0 | GENERAL TOLERANCES (UNLESS SPECIFIED) | | |
| FP = 0 | ANGULAR TOL ± 1° | | |
| DIVISIONAL SYMBOLS | 4 PLACES ± | | |
| | 3 PLACES ± | | |
| | 2 PLACES ± 0.100 | | |
| | 1 PLACE ± 0.20 | | |
| | 0 PLACES ± | | |
| | DRAFT WHERE APPLICABLE MUST REMAIN WITHIN DIMENSIONS | | |

STATUS: Production
DRWN: Yu Chao Fu 2023-04-17
CHK'D: Tom Smith 2025-10-28
APPR: Andy Proffitt 2025-10-28

molex

MX150 RCPT
SINGLE ROW SEALED ASSY MAT SEAL

PRODUCT CUSTOMER DRAWING

| THIRD ANGLE PROJECTION | DRAWING | SERIES | MATERIAL NUMBER | CUSTOMER | SHEET NUMBER |
|---|---|---|---|---|---|
| | D-SIZE | 33471 | SEE NOTE 2a | GENERAL MARKET | 2 OF 8 |

| DOCUMENT NUMBER | DOC TYPE | DOC PART | REVISION |
|---|---|---|---|
| SD-33471-0001 | PSD | 001 | A3 |

FORMAT TC,Alpha40
REVISION: B
DATE: 2020-04-01

# SHEET DESCRIPTION

KEY CONFIGURATIONS

1X2

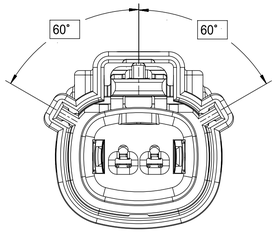


KEY A

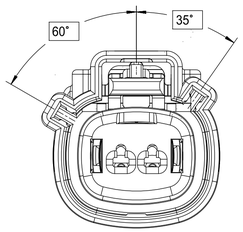


KEY B

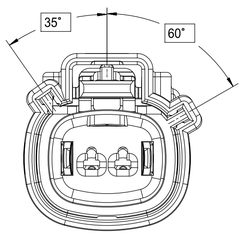


KEY C

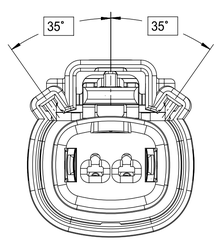


KEY D

THIS DRAWING CONTAINS INFORMATION THAT IS PROPRIETARY TO MOLEX ELECTRONIC TECHNOLOGIES, LLC AND SHOULD NOT BE USED WITHOUT WRITTEN PERMISSION

FUNCTIONAL SYMBOLS

FA = 0

FC = 0

FP = 0

DIVISIONAL SYMBOLS

| DIMENSION UNITS | SCALE |
|---|---|
| MM | 3:1 |

GENERAL TOLERANCES (UNLESS SPECIFIED)

| | |
|---|---|
| ANGULAR TOL | ± 1° |
| 4 PLACES | ± |
| 3 PLACES | ± |
| 2 PLACES | ± 0.100 |
| 1 PLACE | ± 0.20 |
| 0 PLACES | ± |

DRAFT WHERE APPLICABLE MUST REMAIN WITHIN DIMENSIONS

CURRENT REV DESC: ADDED NEW VIEWS

| | | |
|---|---|---|
| STATUS: | Production | |
| DRWN: | Yu Chao Fu | 2023-04-17 |
| CHK'D: | Tom Smith | 2025-10-28 |
| APPR: | Andy Proffitt | 2025-10-28 |

THIRD ANGLE PROJECTION

DRAWING: D-SIZE

SERIES: 33471

molex

MX150 RCPT
SINGLE ROW SEALED ASSY MAT SEAL

PRODUCT CUSTOMER DRAWING

| DOCUMENT NUMBER | DOC TYPE | DOC PART | REVISION |
|---|---|---|---|
| SD-33471-0001 | PSD | 001 | A3 |

| MATERIAL NUMBER | CUSTOMER | SHEET NUMBER |
|---|---|---|
| SEE NOTE 2a | GENERAL MARKET | 3 OF 8 |

FORMAT TYLAnnH3C
FORMAT: 3
DATE: 2022/08/01

# SHEET DESCRIPTION

KEY CONFIGURATIONS CONT.

## 1X6

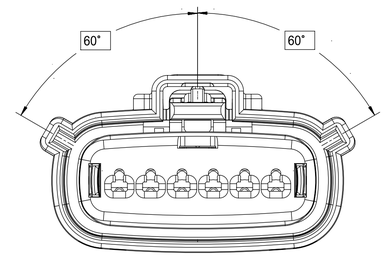


KEY A

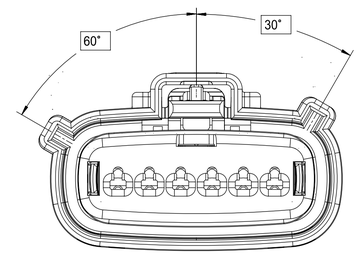


KEY B

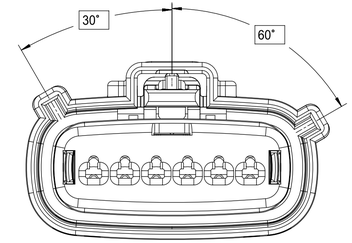


KEY C

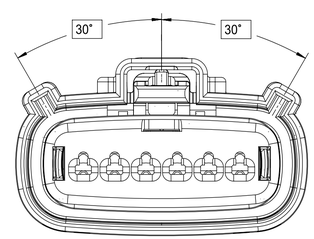


KEY D

THIS DRAWING CONTAINS INFORMATION THAT IS PROPRIETARY TO MOLEX ELECTRONIC TECHNOLOGIES, LLC AND SHOULD NOT BE USED WITHOUT WRITTEN PERMISSION

FUNCTIONAL SYMBOLS
FA = 0
FC = 0
FP = 0

DIVISIONAL SYMBOLS

| DIMENSION UNITS | SCALE |
|---|---|
| MM | 3:1 |

GENERAL TOLERANCES (UNLESS SPECIFIED)

| | |
|---|---|
| ANGULAR TOL | ± 1° |
| 4 PLACES | ± |
| 3 PLACES | ± |
| 2 PLACES | ± 0.100 |
| 1 PLACE | ± 0.20 |
| 0 PLACES | ± |

DRAFT WHERE APPLICABLE MUST REMAIN WITHIN DIMENSIONS

CURRENT REV DESC: ADDED NEW VIEWS

STATUS: Production
DRWN: Yu Chao Fu 2023-04-17
CHK'D: Tom Smith 2025-10-28
APPR: Andy Proffitt 2025-10-28

THIRD ANGLE PROJECTION | DRAWING: D-SIZE | SERIES: 33471

molex

MX150 RCPT
SINGLE ROW SEALED ASSY MAT SEAL

PRODUCT CUSTOMER DRAWING

| DOCUMENT NUMBER | DOC TYPE | DOC PART | REVISION |
|---|---|---|---|
| SD-33471-0001 | PSD | 001 | A3 |

| MATERIAL NUMBER | CUSTOMER | SHEET NUMBER |
|---|---|---|
| SEE NOTE 2a | GENERAL MARKET | 4 OF 8 |

FORMAT TC-Sheet42
REVISION: B
DATE: 2022/06/01

# SHEET DESCRIPTION

RECEPTACLE CONNECTOR ASSEMBLY - STD AND MID-VOLT

## CHARTED DIMENSIONS

| DESCRIPTION | DIMENSIONS | | | | | |
|---|---|---|---|---|---|---|
| | A | B | C | D | E | F |
| 1X2 | 19.40 | 1.75 | 21.73 | 20.55 | 37.65 | 19.64 |
| | | | | | | |
| | | | | | | |
| | | | | | | |
| 1X6 | 32.75 | 1.75 | 35.21 | 19.90 | 37.65 | N/A |
| 1X6 UL V0 | N/A | 1.75 | 35.23 | 19.90 | 37.65 | 33.64 |

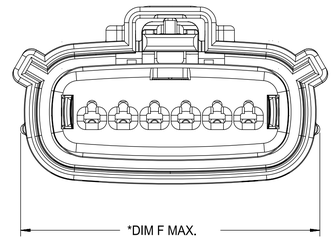


*APPLIE TO UL V0 CONFIGURATIONS ONLY

11

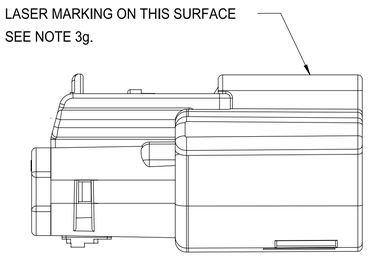


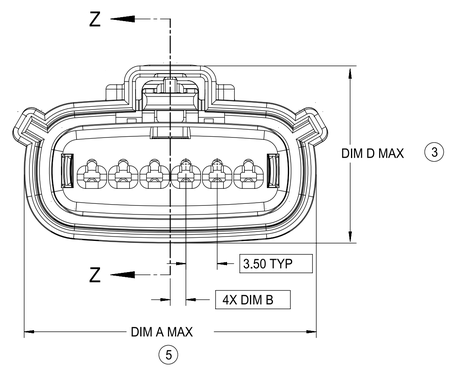


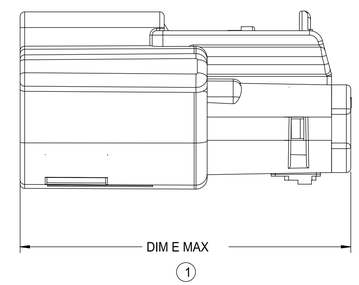


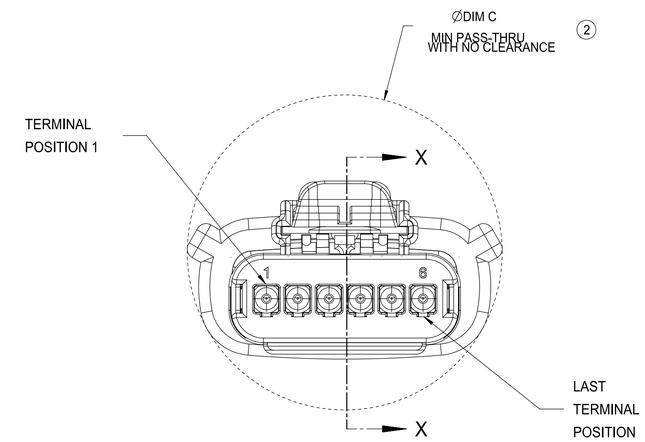


REAR VIEW
(WIRE HARNESS SIDE)

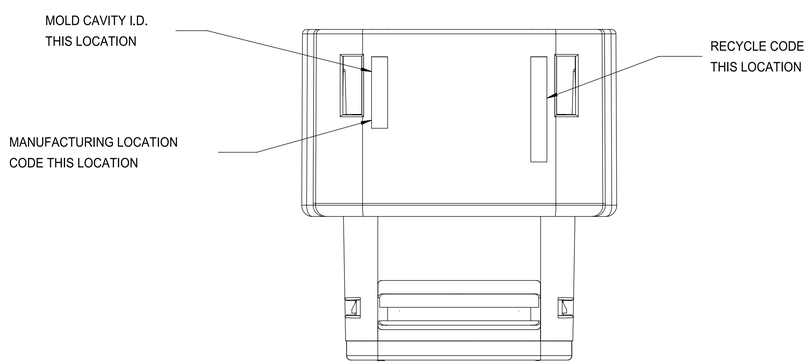


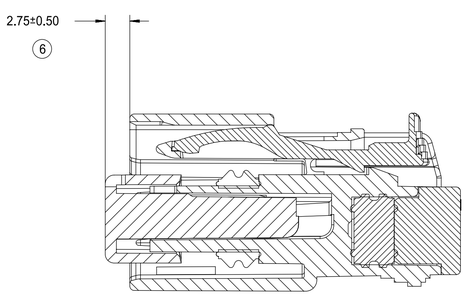


PRIMARY LOCK REINFORCEMENT (PLR) SHOWN
IN PRE-STAGED POSITION

SECTION Z-Z

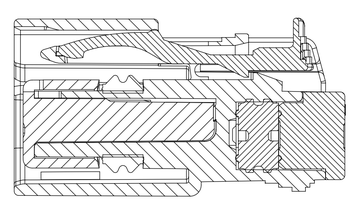

PRIMARY LOCK REINFORCEMENT (PLR) SHOWN
IN FINAL-LOCK POSITION

SECTION X-X

| | | | |
|---|---|---|---|
| FUNCTIONAL SYMBOLS | THIS DRAWING CONTAINS INFORMATION THAT IS PROPRIETARY TO MOLEX ELECTRONIC TECHNOLOGIES, LLC AND SHOULD NOT BE USED WITHOUT WRITTEN PERMISSION | | |
| FA = 0 | DIMENSION UNITS: MM | SCALE: 3:1 | CURRENT REV DESC: ADDED NEW VIEWS |
| FC = 0 | GENERAL TOLERANCES (UNLESS SPECIFIED) | | |
| FE = 0 | ANGULAR TOL ± 1° | | |
| | 4 PLACES ± | | |
| DIVISIONAL SYMBOLS | 3 PLACES ± | | STATUS: Production |
| | 2 PLACES ± 0.100 | | DRWN: Yu Chao Fu 2023-04-17 |
| | 1 PLACE ± 0.20 | | CHK'D: Tom Smith 2025-10-28 |
| | 0 PLACES ± | | APPR: Andy Proffitt 2025-10-28 |
| | DRAFT WHERE APPLICABLE MUST REMAIN WITHIN DIMENSIONS | THIRD ANGLE PROJECTION | DRAWING: D-SIZE / SERIES: 33471 |

molex

MX150 RCPT
SINGLE ROW SEALED ASSY MAT SEAL

PRODUCT CUSTOMER DRAWING

| DOCUMENT NUMBER | DOC TYPE | DOC PART | REVISION |
|---|---|---|---|
| SD-33471-0001 | PSD | 001 | A3 |

| MATERIAL NUMBER | CUSTOMER | SHEET NUMBER |
|---|---|---|
| SEE NOTE 2a | GENERAL MARKET | 5 OF 8 |

FORMAT TYLAprint2
REVISION: B
DATE: 2020-06-01

# SHEET DESCRIPTION

BACKSHELL NOTES

BACKSHELL NOTES: VALID UNLESS OTHERWISE SPECIFIED

1. GENERAL:

a. APPLICATION SPECIFICATION SEE: AS-34951-001

-DESIGNED TO MATE WITH RECEPTACLE SEALED ASSEMBLY
SPECIFIED IN MOLEX DRAWING SD-33471-0001.

-SYSTEM TO BE USED WITH WIRE WITHIN DIAMETER RANGE OF 1.2mm TO 2.69mm.

-COMPONENTS ARE OPTIONAL AND MUST BE PURCHASED SEPERATELY.

-BACKSHELL DESIGN IS OWNED BY SCHLEMMER.

-FOR ADDITIONAL INFORMATION SEE THE BACKSHELL COMPONENT DRAWING SD-34949-0001.

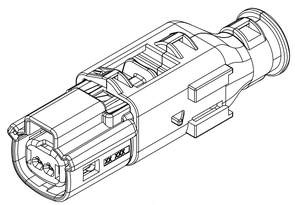

1X2

BACKSHELL CUSTOMER
MODEL NUMBER LEGEND

34949-XXXX

CUSTOMER MODEL COMPONENTS
- 0 - BACKSHELL ONLY
- 1 - BACKSHELL & MX150 HOUSING KEY A ASSEMBLY
- 2 - BACKSHELL & MX150 HOUSING KEY B ASSEMBLY
- 3 - BACKSHELL & MX150 HOUSING KEY C ASSEMBLY
- 4 - BACKSHELL & MX150 HOUSING KEY D ASSEMBLY

BACKSHELL FEATURES
- 1 - WITH RIBS
- 2 - WITHOUT RIBS

MX150 CIRCUIT SIZE 02, 03, 04, 05, 06

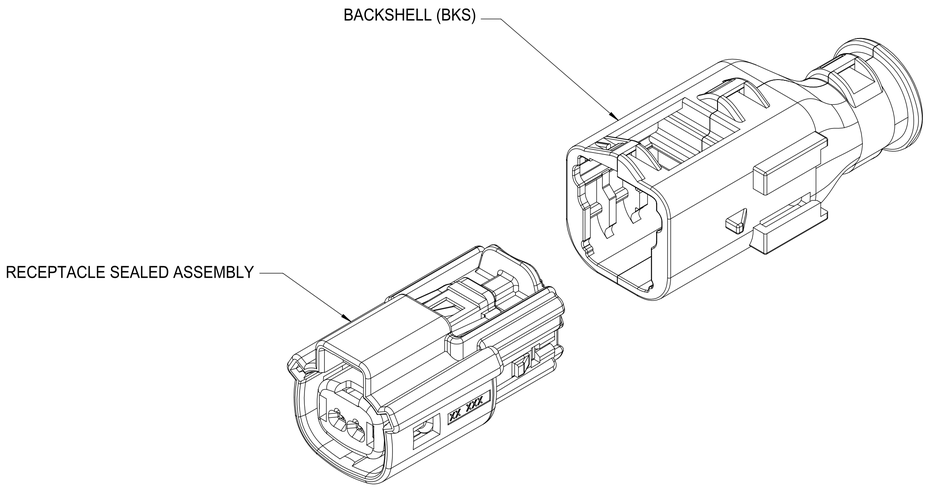


THIS DRAWING CONTAINS INFORMATION THAT IS PROPRIETARY TO MOLEX ELECTRONIC TECHNOLOGIES, LLC AND SHOULD NOT BE USED WITHOUT WRITTEN PERMISSION

FUNCTIONAL SYMBOLS
F/A = 0
F/C = 0
F/P = 0

DIVISIONAL SYMBOLS

| DIMENSION UNITS | SCALE |
|---|---|
| MM | 4:1 |

| GENERAL TOLERANCES (UNLESS SPECIFIED) | |
|---|---|
| ANGULAR TOL | ± 1° |
| 4 PLACES | ± |
| 3 PLACES | ± |
| 2 PLACES | ± 0.100 |
| 1 PLACE | ± 0.20 |
| 0 PLACES | ± |

DRAFT WHERE APPLICABLE MUST REMAIN WITHIN DIMENSIONS

CURRENT REV DESC: ADDED NEW VIEWS

STATUS: Production
DRWN: Yu Chao Fu 2023-04-17
CHK'D: Tom Smith 2025-10-28
APPR: Andy Proffitt 2025-10-28

THIRD ANGLE PROJECTION

| DRAWING | SERIES |
|---|---|
| D-SIZE | 33471 |

molex

MX150 RCPT
SINGLE ROW SEALED ASSY MAT SEAL

PRODUCT CUSTOMER DRAWING

| DOCUMENT NUMBER | DOC TYPE | DOC PART | REVISION |
|---|---|---|---|
| SD-33471-0001 | PSD | 001 | A3 |

| MATERIAL NUMBER | CUSTOMER | SHEET NUMBER |
|---|---|---|
| SEE NOTE 2a | GENERAL MARKET | 6 OF 8 |

FORMAT TC-Sheet40
REVISION: B
DATE: 2022/06/01

# SHEET DESCRIPTION

BACKSHELL

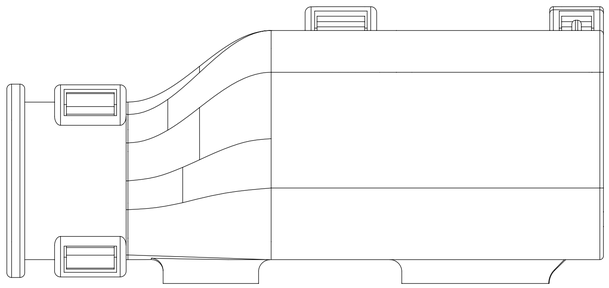

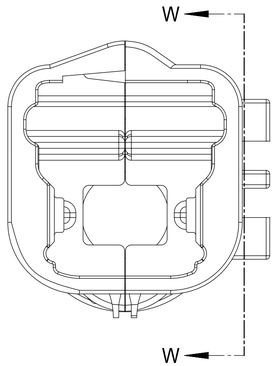


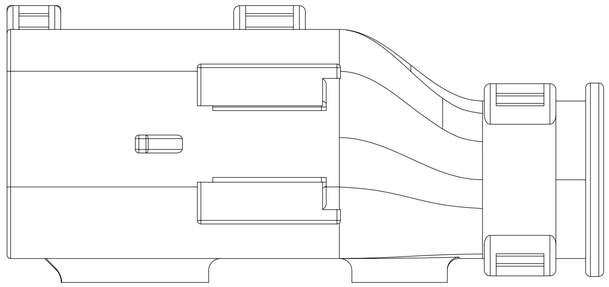

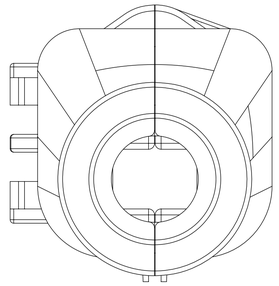

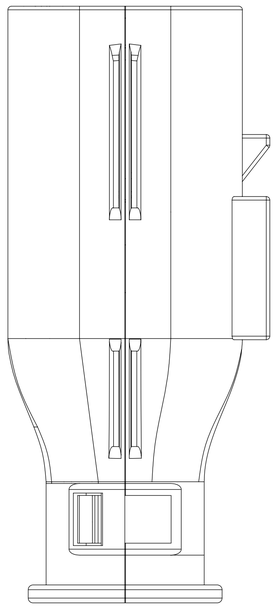

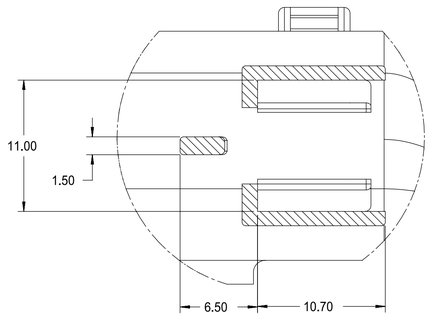


Partial W-W
SCALE 4:1

| FUNCTIONAL SYMBOLS | THIS DRAWING CONTAINS INFORMATION THAT IS PROPRIETARY TO MOLEX ELECTRONIC TECHNOLOGIES, LLC AND SHOULD NOT BE USED WITHOUT WRITTEN PERMISSION | | | |
|---|---|---|---|---|
| FA = 0 | DIMENSION UNITS: MM | SCALE: 4:1 | CURRENT REV DESC: ADDED NEW VIEWS | molex |
| FC = 0 | GENERAL TOLERANCES (UNLESS SPECIFIED) | | | MX150 RCPT<br>SINGLE ROW SEALED ASSY MAT SEAL |
| FP = 0 | ANGULAR TOL ± 1° | | | |
| | 4 PLACES ± | | | |
| DIVISIONAL SYMBOLS | 3 PLACES ± | | | PRODUCT CUSTOMER DRAWING |
| | 2 PLACES ± 0.100 | | STATUS: Production | |
| | 1 PLACE ± 0.20 | | DRWN: Yu Chao Fu 2023-04-17 | DOCUMENT NUMBER: SD-33471-0001 |
| | 0 PLACES ± | | CHK'D: Tom Smith 2025-10-28 | DOC TYPE: PSD; DOC PART: 001; REVISION: A3 |
| | DRAFT WHERE APPLICABLE MUST REMAIN WITHIN DIMENSIONS | | APPR: Andy Proffitt 2025-10-28 | |
| | THIRD ANGLE PROJECTION | DRAWING: D-SIZE | SERIES: 33471 | MATERIAL NUMBER: SEE NOTE 2a; CUSTOMER: GENERAL MARKET; SHEET NUMBER: 7 OF 8 |

FORMAT TUCSHARED
REVISION: B
DATE: 2022/08/01

| SHEET DESCRIPTION |
|---|
| BACKSHELL CONFIGURATIONS |

| CHARTED DIMENSIONS | |
|---|---|
| DESCRIPTION | DIMENSIONS |
| | G |
| 1X2 | 26.00 |
| | |
| | |
| | |
| | |

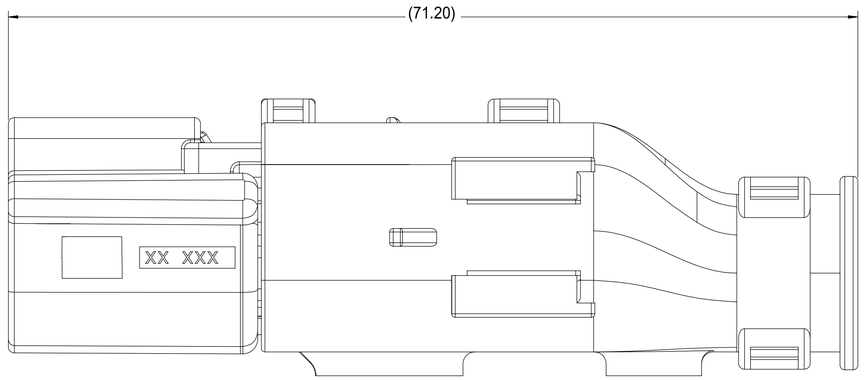


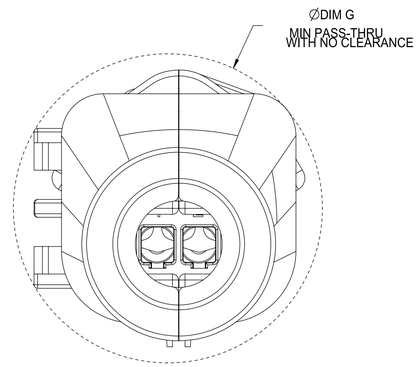


RECEPTACLE SEALED ASSEMBLY WITH RECEPTACLE BACKSHELL

| FUNCTIONAL SYMBOLS | THIS DRAWING CONTAINS INFORMATION THAT IS PROPRIETARY TO MOLEX ELECTRONIC TECHNOLOGIES, LLC AND SHOULD NOT BE USED WITHOUT WRITTEN PERMISSION | | | |
|---|---|---|---|---|
| FA = 0 | DIMENSION UNITS: MM | SCALE: 4:1 | CURRENT REV DESC: ADDED NEW VIEWS | molex |
| FC = 0 | GENERAL TOLERANCES (UNLESS SPECIFIED) | | | MX150 RCPT<br>SINGLE ROW SEALED ASSY MAT SEAL |
| FP = 0 | ANGULAR TOL ± 1° | | | |
| | 4 PLACES ± | | | |
| DIVISIONAL SYMBOLS | 3 PLACES ± | | | PRODUCT CUSTOMER DRAWING |
| | 2 PLACES ± 0.100 | | STATUS: Production | |
| | 1 PLACE ± 0.20 | | DRWN: Yu Chao Fu 2023-04-17 | DOCUMENT NUMBER: SD-33471-0001 |
| | 0 PLACES ± | | CHK'D: Tom Smith 2025-10-28 | DOC TYPE: PSD / DOC PART: 001 / REVISION: A3 |
| | DRAFT WHERE APPLICABLE MUST REMAIN WITHIN DIMENSIONS | THIRD ANGLE PROJECTION | APPR: Andy Proffitt 2025-10-28 | |
| | | DRAWING: D-SIZE | SERIES: 33471 | MATERIAL NUMBER: SEE NOTE 2a / CUSTOMER: GENERAL MARKET / SHEET NUMBER: 8 OF 8 |

FORMAT TC(Sealed)
REVISION: B
DATE: 2022/06/01

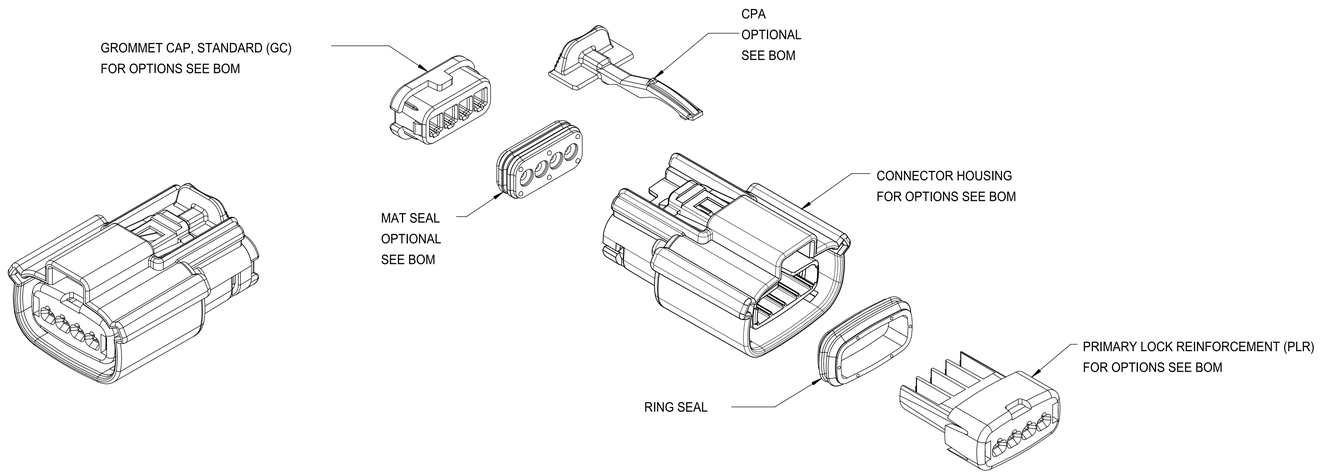


MX150 1X4 RECEPTACLE SEALED ASSEMBLY - STANDARD (STD)

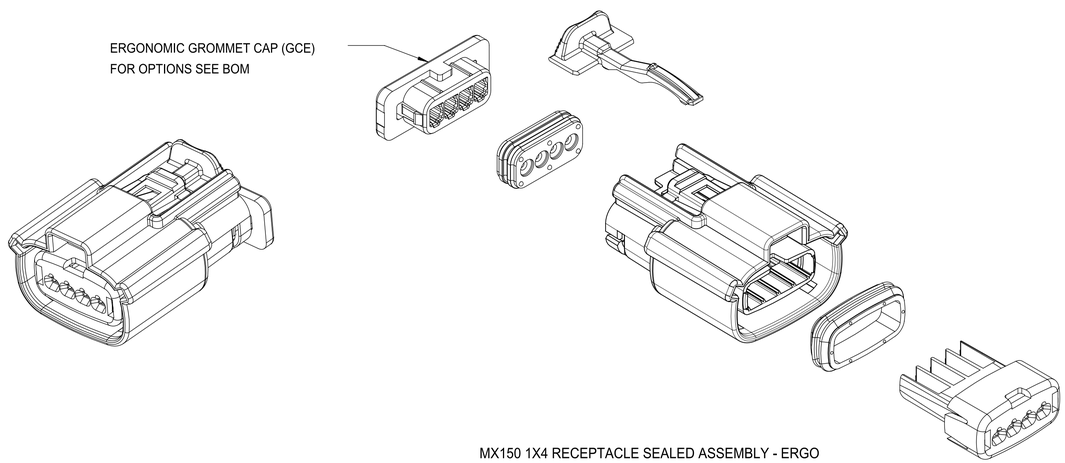


MX150 1X4 RECEPTACLE SEALED ASSEMBLY - ERGO
UNLESS COMPONENT NOTED, SEE STANDARD ASSEMBLY

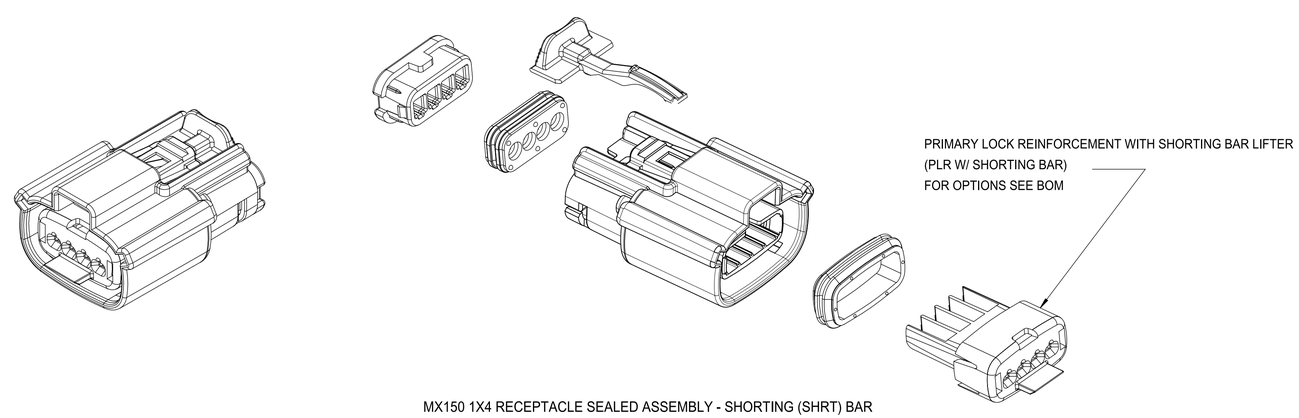


MX150 1X4 RECEPTACLE SEALED ASSEMBLY - SHORTING (SHRT) BAR
UNLESS COMPONENT NOTED, SEE STANDARD ASSEMBLY

## TABLE OF CONTENTS


| SHEET NO. | SHEET DESCRIPTION |
|---|---|
| 1-2 | NOTES AND EXPLODED VIEW |
| 3 | KEY CONFIGURATIONS |
| 4 | RECEPTACLE SEALED ASSEMBLY |
| 5-8 | BOM |


NOTES: VALID UNLESS OTHERWISE SPECIFIED

1. GENERAL:
a. APPLICATION SPECIFICATION SEE: AS-33472-100
-CONTAINS: PRODUCT INTRODUCTION, PRODUCT SUMMARY, CONNECTOR ASSEMBLY, PACKAGING INFORMATION, CONNECTOR MATING, SERVICE INSTRUCTIONS, ELECTRICAL CONTINUITY CHECKING, CRIMPING, AND TROUBLESHOOTING.
-STANDARD (NON-SHRT) CONFIGURATIONS DESIGNED TO MATE WITH DEVICE CONNECTION AS SPECIFIED IN DRAWING SD-33481-041 AND EWCAP 150-S-004-1-Z03, AVAILIBLE AT http://ewcap.uscarteams.org
-MID-VOLT CONFIGURATIONS DESIGNED TO MATE WITH INTERFACE EWCAP 150-S-004-1-Z03 ONLY
-SHORTING BAR CONFIGURATIONS DESIGNED TO MATE WITH BLADE SEALED ASSEMBLY SPECIFIED IN DRAWING SD-31280-200
-FOR 1.5mm RECEPTACLE TERMINALS TO BE USED WITH THIS ASSEMBLY. SEE MOLEX DRAWING SD-33012-002.
-SYSTEM TO BE USED WITH WIRE WITHIN DIAMETER RANGE OF 1.2mm TO 2.69mm.
-ASSEMBLY SHIPPED WITH PLR AND CPA IN PRE-LOCK POSITION (SEE SECTION Z-Z PRE-LOCK).
-IN THE EVENT THAT THE PLR IS FOUND IN THE SEATED (FINAL LOCK) POSITION, REFER TO MOLEX SPECIFICATION PS-34646-001, AVAILABLE AT www.molex.com <http://www.molex.com>.
-ASSEMBLY CONFORMS TO SAE/USCAR-2 REV 4 WITH THE FOLLOWING EXCEPTIONS: ENGAGEMENT FORCE TO MOVE CPA FROM PRE-LOCK TO FINAL LOCK POSITION WHEN UNMATED: 40N MIN.
DISENGAGEMENT FORCE TO MOVE CPA FROM FINAL LOCK TO PRE-LOCK POSITION: 3N MIN, 40N MAX.
TERMINAL INSERTION FORCE FOR WIRE DIAMETER ABOVE 2.5mm AND NOT EXCEEDING 2.69mm SHALL NOT EXCEED 40 NEWTONS.
b. PRODUCT SPECIFICATION SEE: PS-33471-000
CONTAINS: PRODUCT INTRODUCTION, PRODUCT SUMMARY, RATINGS (CURRENT, TEMPERATURE, SEALING, AND FLAMMABILITY), AND PRODUCT VALIDATION.
c. PACKAGING SPECIFICATION PER MOLEX DRAWING: PK-31300-903
d. PARTS MUST BE IN COMPLIANCE TO MOLEX CHEMICAL SUBSTANCES FOR PRODUCTS AND PACKAGING SPECIFICATION: ES-40000-5016
e. DATA MUST BE SUBMITTED UNDER THE MOLEX PART NUMBER TO IMDS (COMPANY ID#13255)

2. DESIGN - MATERIALS:
a. SEE BOM TABLE

3. DESIGN - GEOMETRY:
a. THIS IS A 100% CAD GENERATED PART. THE CAD MATHEMATICAL DATA IS THE MASTER FOR THIS PART. FOR DIMENSIONAL OR ANY INFORMATION NOT SHOWN ON THIS DRAWING, ANALYZE THE CAD MODEL.
b. GEOMETRIC DIMENSIONS AND TOLERANCES PER ASME Y14.5M - 1994
c. EDGES AND UNDIMENSIONED DETAILS PER ISO13715
d. CORNERS SHOWN AS SHARP TO BE R 0.2 MAX.
e. LETTERING SHALL BE 0.15 MAX RAISED IN 0.25 MAX RECESS PAD. THIS INCLUDES RECYCLING CODE, CAVITY ID, VENDOR IDENTIFICATION, AND CUSTOMER MATERIAL NUMBER.
f. VISUAL DEFECTS SHALL MEET COSMETIC STANDARD PS-45499-002 (Class B)
g. LASER MARKING: TBD

| REV | DESCRIPTION |
|---|---|
| W14 | ADD NEW P/N 33471-0700 |
| W13 | ADDED 3003634111 PART NUMBER AND SWIM LANES ON SHEET 8 |
| W12 | UPDATED DESIGN CHANGE - ADDED RELIEF SLOT |
| W11 | UPDATED P/N 300363-4016/4006/4001 STATUS TO CONCEPT DESIGN |
| W10 | ADD NEW P/N 33471-0499 |
| W9 | UPDATED MID-VOLT STATUS FROM "OK TO TOOL" TO "SALEABLE" ON SHEET 8 |
| W8 | ADDED MID-VOLT VERSION ASSEMBLY |
| W7 | ADD NEW P/N 33471-0498 |
| W6 | ADD NEW P/N 33471-0497 |
| W5 | ADD NEW P/N 33471-0496 |
| W4 | ADD NEW P/N 33471-0495 |
| W3 | UPDATED THE DRAWING FRAME |
| W2 | ADD NEW P/N 33471-0494 |
| W1 | ADD NEW P/N 33471-0493 |

INSPECTION NUMBER LOG
LAST NUMBER USED: 5
ADDED:
REMOVED: 2

THIS DRAWING CONTAINS INFORMATION THAT IS PROPRIETARY TO MOLEX ELECTRONIC TECHNOLOGIES, LLC AND SHOULD NOT BE USED WITHOUT WRITTEN PERMISSION

FUNCTIONAL SYMBOLS: FA = 0, FC = 0, FP = 0
DIVISIONAL SYMBOLS

| DIMENSION UNITS | SCALE |
|---|---|
| MM | 2:1 |

GENERAL TOLERANCES (UNLESS SPECIFIED)

| | |
|---|---|
| ANGULAR TOL | ± 3' |
| 4 PLACES | ± |
| 3 PLACES | ± |
| 2 PLACES | ± 0.100 |
| 1 PLACE | ± 0.30 |
| 0 PLACES | ± |

DRAFT WHERE APPLICABLE MUST REMAIN WITHIN DIMENSIONS

CURRENT REV DESC: SEE REVISION TABLE

STATUS: Production
DRWN: Srikanth CV 2026-06-11
CHK'D: Chaitra D 2026-06-15
APPR: Gurunandan GA 2026-06-15

THIRD ANGLE PROJECTION | DRAWING: D-SIZE | SERIES: 33471

molex

MX150 1X4 RECEPTACLE
SEALED ASSEMBLY MAT SEAL

PRODUCT CUSTOMER DRAWING

| DOCUMENT NUMBER | DOC TYPE | DOC PART | REVISION |
|---|---|---|---|
| SD-33471-041 | PSD | 002 | W14 |

MATERIAL NUMBER | CUSTOMER: GENERAL MARKET | SHEET NUMBER: 1 OF 8

FORMAT TC-Sp-mm-02
REVISION: B
DATE: 2022/08/01

# MID-VOLT VIEW AND KEY CONFIGURATIONS

W8

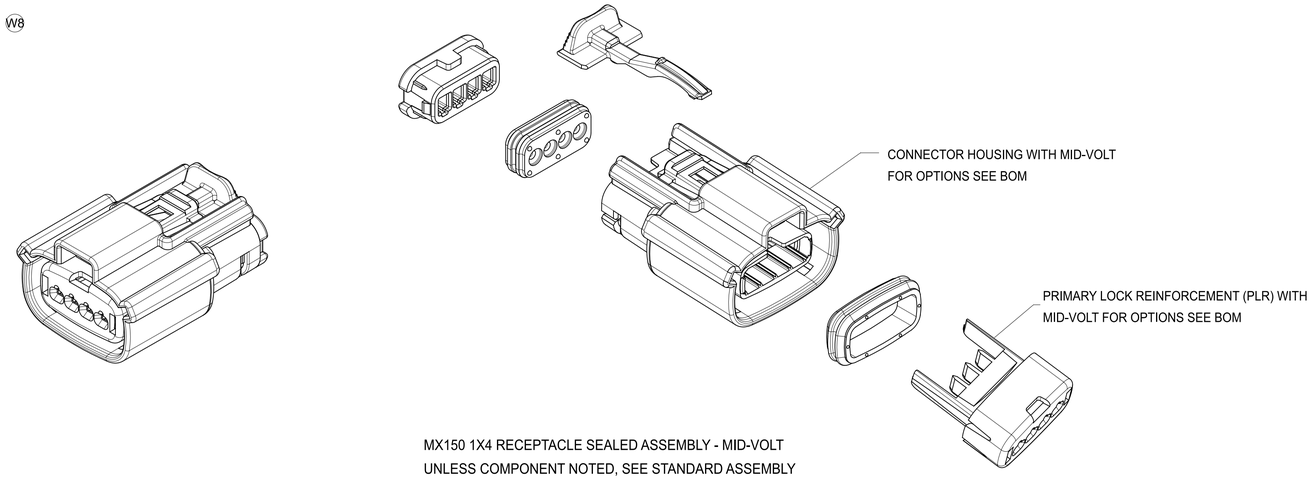


MX150 1X4 RECEPTACLE SEALED ASSEMBLY - MID-VOLT
UNLESS COMPONENT NOTED, SEE STANDARD ASSEMBLY

THIS DRAWING CONTAINS INFORMATION THAT IS PROPRIETARY TO MOLEX ELECTRONIC TECHNOLOGIES, LLC AND SHOULD NOT BE USED WITHOUT WRITTEN PERMISSION

| FUNCTIONAL SYMBOLS | DIMENSION UNITS | SCALE |
|---|---|---|
| FA = 0 | MM | 2:1 |
| FC = 0 | GENERAL TOLERANCES (UNLESS SPECIFIED) | |
| FD = 0 | ANGULAR TOL | ± 3° |
| DIVISIONAL SYMBOLS | 4 PLACES | ± |
| | 3 PLACES | ± |
| | 2 PLACES | ± 0.100 |
| | 1 PLACE | ± 0.30 |
| | 0 PLACES | ± |
| | DRAFT WHERE APPLICABLE MUST REMAIN WITHIN DIMENSIONS | |

CURRENT REV DESC: SEE REVISION TABLE

STATUS: Production
DRWN: Srikanth CV 2026-06-11
CHK'D: Chaitra D 2026-06-15
APPR: Gurunandan GA 2026-06-15

THIRD ANGLE PROJECTION | DRAWING: D-SIZE | SERIES: 33471

molex

MX150 1X4 RECEPTACLE
SEALED ASSEMBLY MAT SEAL

PRODUCT CUSTOMER DRAWING

| DOCUMENT NUMBER | DOC TYPE | DOC PART | REVISION |
|---|---|---|---|
| SD-33471-041 | PSD | 002 | W14 |

MATERIAL NUMBER | CUSTOMER: GENERAL MARKET | SHEET NUMBER: 2 OF 8

FORMAT TLANDHO
REVISION: B
DATE: 2020-06-01

# KEY CONFIGURATIONS

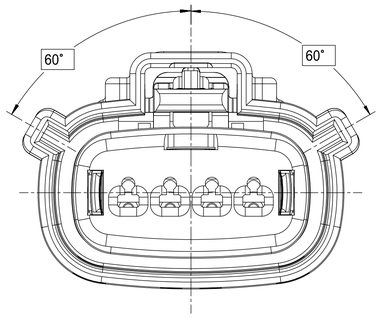


KEY A

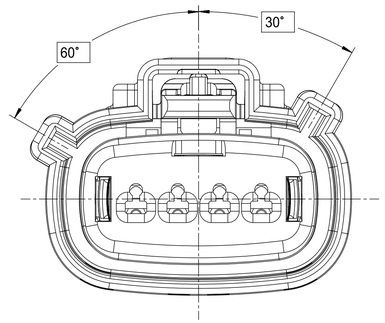


KEY B

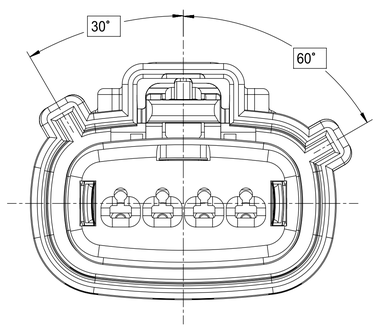


KEY C

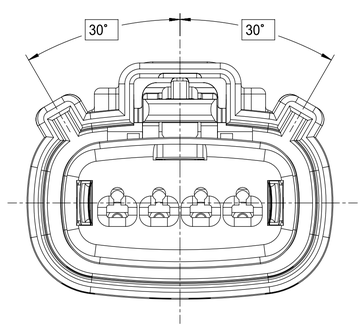


KEY D

| | | | |
|---|---|---|---|
| FUNCTIONAL SYMBOLS | THIS DRAWING CONTAINS INFORMATION THAT IS PROPRIETARY TO MOLEX ELECTRONIC TECHNOLOGIES, LLC AND SHOULD NOT BE USED WITHOUT WRITTEN PERMISSION | | |
| FA = 0 | DIMENSION UNITS: MM | SCALE: 4:1 | CURRENT REV DESC: SEE REVISION TABLE |
| FC = 0 | GENERAL TOLERANCES (UNLESS SPECIFIED) | | |
| FP = 0 | ANGULAR TOL | ± 3° | |
| | 4 PLACES | ± | |
| DIVISIONAL SYMBOLS | 3 PLACES | ± | |
| | 2 PLACES | ± 0.100 | |
| | 1 PLACE | ± 0.30 | |
| | 0 PLACES | ± | |
| | DRAFT WHERE APPLICABLE MUST REMAIN WITHIN DIMENSIONS | THIRD ANGLE PROJECTION | DRAWING: D-SIZE / SERIES: 33471 |

STATUS: Production
DRWN: Srikanth CV 2026-06-11
CHK'D: Chaitra D 2026-06-15
APPR: Gurunandan GA 2026-06-15

molex

MX150 1X4 RECEPTACLE
SEALED ASSEMBLY MAT SEAL

PRODUCT CUSTOMER DRAWING

| DOCUMENT NUMBER | DOC TYPE | DOC PART | REVISION |
|---|---|---|---|
| SD-33471-041 | PSD | 002 | W14 |

| MATERIAL NUMBER | CUSTOMER | SHEET NUMBER |
|---|---|---|
| | GENERAL MARKET | 3 OF 8 |

FORMAT TC(Alpha)01
REVISION: B
DATE: 2020/06/01

# RECEPTACLE SEALED ASSEMBLY

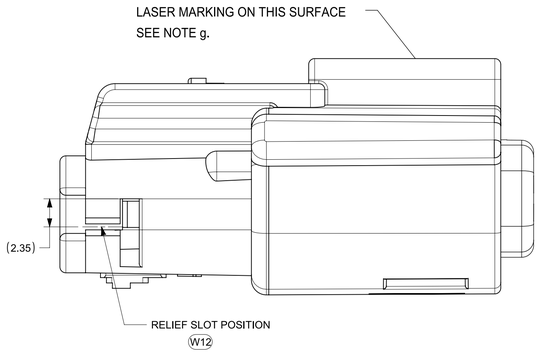


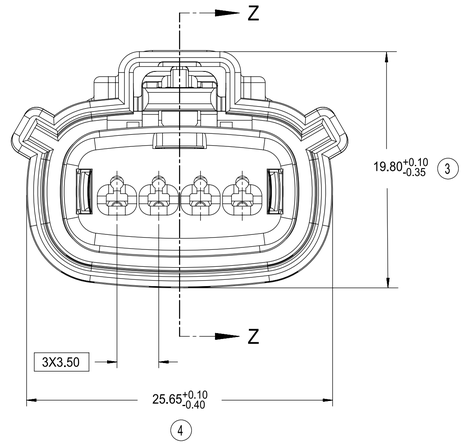


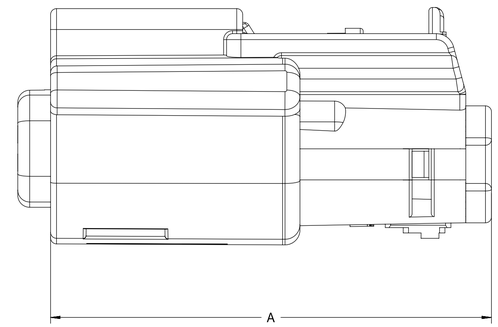


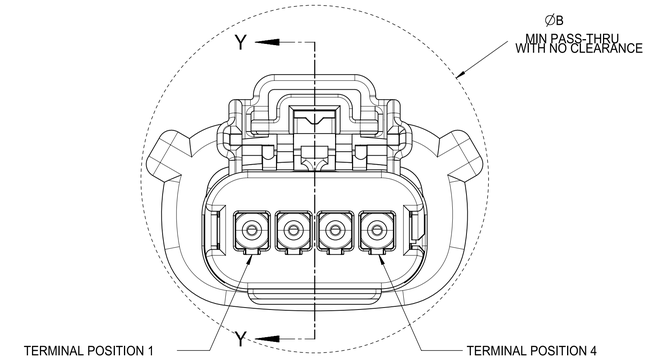


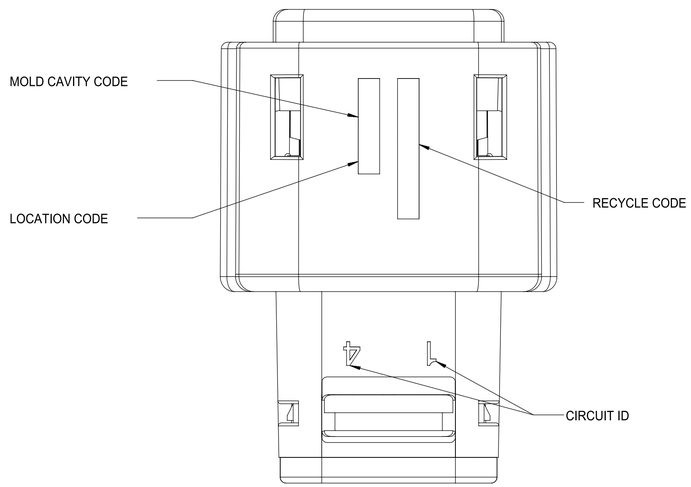


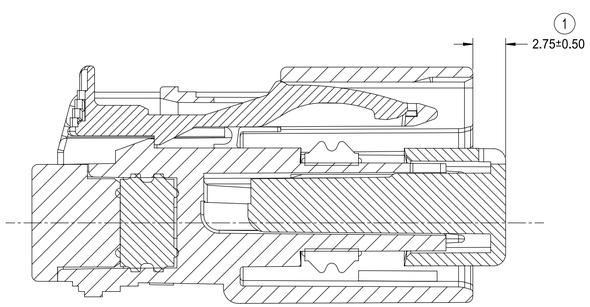


PRIMARY LOCK REINFORCEMENT (PLR) SHOWN
IN PRE-STAGED POSITION

SECTION Z-Z

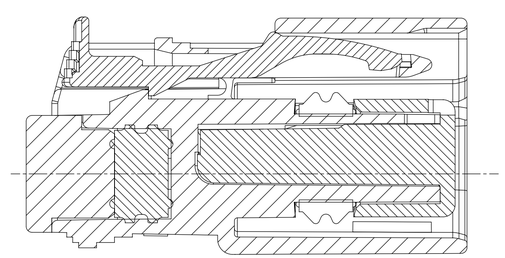

PRIMARY LOCK REINFORCEMENT (PLR) SHOWN
IN FINAL-LOCK POSITION

SECTION Y-Y

## CHARTED DIMENSIONS

| CONFIGURATION | A | B |
|---|---|---|
| MX150 1X4 RECPT SEALED ASSY - STANDARD | 36.95 ±0.70 | 29.14 |
| MX150 1X4 RECPT SEALED ASSY - ERGO | 36.95 ±0.90 | 29.33 |
| MX150 1X4 RECPT SEALED ASSY - SHORTING (SHRT) BAR | 36.95 ±0.70 | 29.14 |

THIS DRAWING CONTAINS INFORMATION THAT IS PROPRIETARY TO MOLEX ELECTRONIC TECHNOLOGIES, LLC AND SHOULD NOT BE USED WITHOUT WRITTEN PERMISSION

FUNCTIONAL SYMBOLS
FA = 0
FC = 0
FD = 0
DIVISIONAL SYMBOLS

| DIMENSION UNITS | SCALE |
|---|---|
| MM | 4:1 |

GENERAL TOLERANCES (UNLESS SPECIFIED)

| | |
|---|---|
| ANGULAR TOL | ± 3° |
| 4 PLACES | ± |
| 3 PLACES | ± |
| 2 PLACES | ± 0.100 |
| 1 PLACE | ± 0.30 |
| 0 PLACES | ± |

DRAFT WHERE APPLICABLE MUST REMAIN WITHIN DIMENSIONS

CURRENT REV DESC: SEE REVISION TABLE

STATUS: Production
DRWN: Srikanth CV 2026-06-11
CHK'D: Chaitra D 2026-06-15
APPR: Gurunandan GA 2026-06-15

THIRD ANGLE PROJECTION | DRAWING: D-SIZE | SERIES: 33471

molex

MX150 1X4 RECEPTACLE
SEALED ASSEMBLY MAT SEAL

PRODUCT CUSTOMER DRAWING

| DOCUMENT NUMBER | DOC TYPE | DOC PART | REVISION |
|---|---|---|---|
| SD-33471-041 | PSD | 002 | W14 |

MATERIAL NUMBER | CUSTOMER: GENERAL MARKET | SHEET NUMBER: 4 OF 8

FORMAT TO:dsamm0
DATE: 2026-06-11
DATE: 2026-06-11

BOM SHEET 1

| ASSEMBLY DESCRIPTION | ASSEMBLY PART NUMBER | A | B | C | D | C | C | D | GCO | GCP | GCEO | GCEP | P | PS | M | CPA | 1 | 2 | 3 | 4 | STATUS | COMMENTS |
|---|---|---|---|---|---|---|---|---|---|---|---|---|---|---|---|---|---|---|---|---|---|---|
| VOID KEY | 33471-0440 | | | | | | | | | | | | | | | | | | | | | |
| KEY D W/ SHRT. BAR, GREEN | 33471-0439 | | | | D | | | | GCO | | | | | PS | M | | | | | | NOT RECOMMENDED | SEE P/N 33471-0481 |
| KEY C W/ SHRT. BAR, BROWN | 33471-0438 | | | C | | | | | GCO | | | | | PS | M | | | | | | NOT RECOMMENDED | SEE P/N 33471-0480 |
| KEY B W/ SHRT. BAR, LT. GRAY | 33471-0437 | | B | | | | | | GCO | | | | | PS | M | | | | | | | |
| KEY A W/ SHRT. BAR, BLACK | 33471-0436 | A | | | | | | | GCO | | | | | PS | M | | | | | | SALEABLE | |
| VOID KEY | 33471-0435 | | | | | | | | | | | | | | | | | | | | | |
| KEY D W/O MAT SEAL, GREEN | 33471-0434 | | | | D | | | | GCO | | | | P | | | | | | | | NOT RECOMMENDED | SEE P/N 33471-0479 |
| KEY C W/O MAT SEAL, BROWN | 33471-0433 | | | C | | | | | GCO | | | | P | | | | | | | | NOT RECOMMENDED | SEE P/N 33471-0478 |
| KEY B W/O MAT SEAL, LT. GRAY | 33471-0432 | | B | | | | | | GCO | | | | P | | | | | | | | | NOT VALIDATED |
| KEY A W/O MAT SEAL, BLACK | 33471-0431 | A | | | | | | | GCO | | | | P | | | | | | | | SALEABLE | NOT VALIDATED |
| VOID KEY | 33471-0430 | | | | | | | | | | | | | | | | | | | | | |
| KEY D W/ CPA, GREEN | 33471-0429 | | | | D | | | | | GCP | | | P | | M | CPA | 1 | | | 4 | NOT RECOMMENDED | SEE P/N 33471-0477 |
| KEY C W/ CPA, BROWN | 33471-0428 | | | C | | | | | | GCP | | | P | | M | CPA | 1 | | | 4 | NOT RECOMMENDED | SEE P/N 33471-0476 |
| KEY B W/ CPA, LT. GRAY | 33471-0427 | | B | | | | | | | GCP | | | P | | M | CPA | 1 | | | 4 | | |
| KEY A W/ CPA, BLACK | 33471-0426 | A | | | | | | | | GCP | | | P | | M | CPA | 1 | | | 4 | SALEABLE | |
| VOID KEY | 33471-0425 | | | | | | | | | | | | | | | | | | | | | |
| KEY D, GREEN | 33471-0424 | | | | D | | | | | GCP | | | P | | M | | 1 | | | 4 | NOT RECOMMENDED | SEE P/N 33471-0475 |
| KEY C, BROWN | 33471-0423 | | | C | | | | | | GCP | | | P | | M | | 1 | | | 4 | NOT RECOMMENDED | SEE P/N 33471-0474 |
| KEY B, LT. GRAY | 33471-0422 | | B | | | | | | | GCP | | | P | | M | | 1 | | | 4 | | |
| KEY A, BLACK | 33471-0421 | A | | | | | | | | GCP | | | P | | M | | 1 | | | 4 | SALEABLE | |
| VOID KEY | 33471-0420 | | | | | | | | | | | | | | | | | | | | | |
| KEY D W/ CPA, GREEN | 33471-0419 | | | | D | | | | | GCP | | | P | | M | CPA | | | | 4 | NOT RECOMMENDED | SEE P/N 33471-0473 |
| KEY C W/ CPA, BROWN | 33471-0418 | | | C | | | | | | GCP | | | P | | M | CPA | | | | 4 | NOT RECOMMENDED | SEE P/N 33471-0472 |
| KEY B W/ CPA, LT. GRAY | 33471-0417 | | B | | | | | | | GCP | | | P | | M | CPA | | | | 4 | | |
| KEY A W/ CPA, BLACK | 33471-0416 | A | | | | | | | | GCP | | | P | | M | CPA | | | | 4 | SALEABLE | |
| VOID KEY | 33471-0415 | | | | | | | | | | | | | | | | | | | | | |
| KEY D, GREEN | 33471-0414 | | | | D | | | | | GCP | | | P | | M | | | | | 4 | NOT RECOMMENDED | SEE P/N 33471-0471 |
| KEY C, BROWN | 33471-0413 | | | C | | | | | | GCP | | | P | | M | | | | | 4 | NOT RECOMMENDED | SEE P/N 33471-0470 |
| KEY B, LT. GRAY | 33471-0412 | | B | | | | | | | GCP | | | P | | M | | | | | 4 | | |
| KEY A, BLACK | 33471-0411 | A | | | | | | | | GCP | | | P | | M | | | | | 4 | SALEABLE | |
| KEY C W/ CPA, BLACK | 33471-0410 | | | | | C | | | GCO | | | | P | | M | CPA | | | | | | |
| KEY D W/ CPA, GREEN | 33471-0409 | | | | D | | | | GCO | | | | P | | M | CPA | | | | | NOT RECOMMENDED | SEE P/N 33471-0465 |
| KEY C W/ CPA, BROWN | 33471-0408 | | | C | | | | | GCO | | | | P | | M | CPA | | | | | NOT RECOMMENDED | SEE P/N 33471-0464 |
| KEY B W/ CPA, LT. GRAY | 33471-0407 | | B | | | | | | GCO | | | | P | | M | CPA | | | | | | |
| KEY A W/ CPA, BLACK | 33471-0406 | A | | | | | | | GCO | | | | P | | M | CPA | | | | | SALEABLE | |
| VOID KEY | 33471-0405 | | | | | | | | | | | | | | | | | | | | | |
| KEY D, GREEN | 33471-0404 | | | | D | | | | GCO | | | | P | | M | | | | | | NOT RECOMMENDED | SEE P/N 33471-0463 |
| KEY C, BROWN | 33471-0403 | | | C | | | | | GCO | | | | P | | M | | | | | | NOT RECOMMENDED | SEE P/N 33471-0462 |
| KEY B, LT. GRAY | 33471-0402 | | B | | | | | | GCO | | | | P | | M | | | | | | | |
| KEY A, BLACK | 33471-0401 | A | | | | | | | GCO | | | | P | | M | | | | | | SALEABLE | |

BLOCKED TERMINAL

CAVITY WITH A NUMBER INDICATES BLOCKED TERMINAL POSITION
CAVITY WITHOUT A NUMBER INDICATES OPEN TERMINAL POSITION

| DESCRIPTION | COLOR | MATERIAL |
|---|---|---|
| RING SEAL | BURNT ORANGE | INHERENTLY LUBRICATED SILICONE |
| CPA | BRIGHT RED | PBT GF30 |
| MAT SEAL | LIGHT BLUE | INHERENTLY LUBRICATED SILICONE |
| SHORTING BAR PLR | NATURAL | SPS/NYLON GF20 |
| STANDARD PLR | NATURAL | SPS/NYLON GF20 |
| ERGONOMIC GROMMET CAP, PLUGGED | BLACK | SPS/NYLON GF20 |
| ERGONOMIC GROMMET CAP, OPEN | BLACK | SPS/NYLON GF20 |
| STANDARD GROMMET CAP, PLUGGED | BLACK | SPS/NYLON GF20 |
| STANDARD GROMMET CAP, OPEN | BLACK | SPS/NYLON GF20 |
| HOUSING KEYING OPTION D | STONE GRAY | SPS/NYLON GF20 |
| HOUSING KEYING OPTION C | DARK GRAY | SPS/NYLON GF20 |
| HOUSING KEYING OPTION C | BLACK | SPS/NYLON GF20 |
| HOUSING KEYING OPTION D | GREEN | SPS/NYLON GF20 |
| HOUSING KEYING OPTION C | BROWN | SPS/NYLON GF20 |
| HOUSING KEYING OPTION B | LIGHT GRAY | SPS/NYLON GF20 |
| HOUSING KEYING OPTION A | BLACK | SPS/NYLON GF20 |

BOM/APPLICABLE COMPONENTS TABLE

## TABLE LEGEND

| ABREVIATION | COMPONENT |
|---|---|
| A | HOUSING KEY A |
| B | HOUSING KEY B |
| C | HOUSING KEY C |
| D | HOUSING KEY D |
| GCO | GROMMET CAP, STANDARD, OPEN |
| GCP | GROMMET CAP, STANDARD, PLUGGED |
| GCEO | GROMMET CAP, ERGONOMIC, OPEN |
| GCEP | GROMMET CAP, ERGONOMIC, PLUGGED |
| M | MAT SEAL |
| P | PLR, STANDARD |
| PS | PLR, SHRT. BAR LIFTER |
| R | RING SEAL |
| CPA | CPA |

FUNCTIONAL SYMBOLS
FA = 0
FC = 0
FP = 0

DIVISIONAL SYMBOLS

THIS DRAWING CONTAINS INFORMATION THAT IS PROPRIETARY TO MOLEX ELECTRONIC TECHNOLOGIES, LLC AND SHOULD NOT BE USED WITHOUT WRITTEN PERMISSION

| DIMENSION UNITS | SCALE |
|---|---|
| MM | 1:1 |

GENERAL TOLERANCES (UNLESS SPECIFIED)

| | |
|---|---|
| ANGULAR TOL | ± 3° |
| 4 PLACES | ± |
| 3 PLACES | ± |
| 2 PLACES | ± 0.100 |
| 1 PLACE | ± 0.30 |
| 0 PLACES | ± |

DRAFT WHERE APPLICABLE MUST REMAIN WITHIN DIMENSIONS

CURRENT REV DESC: SEE REVISION TABLE

STATUS: Production
DRWN: Srikanth CV 2026-06-11
CHK'D: Chaitra D 2026-06-15
APPR: Gurunandan GA 2026-06-15

THIRD ANGLE PROJECTION | DRAWING: D-SIZE | SERIES: 33471

molex

MX150 1X4 RECEPTACLE
SEALED ASSEMBLY MAT SEAL

PRODUCT CUSTOMER DRAWING

| DOCUMENT NUMBER | DOC TYPE | DOC PART | REVISION |
|---|---|---|---|
| SD-33471-041 | PSD | 002 | W14 |

| MATERIAL NUMBER | CUSTOMER | SHEET NUMBER |
|---|---|---|
| | GENERAL MARKET | 5 OF 8 |

# BOM SHEET 2

| ASSEMBLY DESCRIPTION | ASSEMBLY PART NUMBER | A | B | C | D | C | C | D | GCO | GCP | GCEO | GCEP | P | PS | M | CPA | 1 | 2 | 3 | 4 | STATUS | COMMENTS |
|---|---|---|---|---|---|---|---|---|---|---|---|---|---|---|---|---|---|---|---|---|---|---|
| KEY C W/ SHRT. BAR, DARK GRAY | 33471-0480 | | | | | | C | | GCO | | | | | PS | M | | | | | | SALEABLE | |
| KEY D W/O MAT SEAL, STONE GRAY | 33471-0479 | | | | | | | D | GCO | | | | P | | | | | | | | SALEABLE | |
| KEY C W/O MAT SEAL, DARK GRAY | 33471-0478 | | | | | | C | | GCO | | | | P | | | | | | | | SALEABLE | |
| KEY D W/ CPA, STONE GRAY | 33471-0477 | | | | | | | D | | GCP | | | P | | M | CPA | 1 | | | 4 | SALEABLE | |
| KEY C W/ CPA, DARK GRAY | 33471-0476 | | | | | | C | | | GCP | | | P | | M | CPA | 1 | | | 4 | SALEABLE | |
| KEY D, STONE GRAY | 33471-0475 | | | | | | | D | | GCP | | | P | | M | | 1 | | | 4 | SALEABLE | |
| KEY C, DARK GRAY | 33471-0474 | | | | | | C | | | GCP | | | P | | M | | 1 | | | 4 | SALEABLE | |
| KEY D W/ CPA, STONE GRAY | 33471-0473 | | | | | | | D | | GCP | | | P | | M | CPA | | | | 4 | SALEABLE | |
| KEY C W/ CPA, DARK GRAY | 33471-0472 | | | | | | C | | | GCP | | | P | | M | CPA | | | | 4 | SALEABLE | |
| KEY D, STONE GRAY | 33471-0471 | | | | | | | D | | GCP | | | P | | M | | | | | 4 | SALEABLE | |
| KEY C, DARK GRAY | 33471-0470 | | | | | | C | | | GCP | | | P | | M | | | | | 4 | SALEABLE | |
| KEY A, BLACK | 33471-0469 | A | | | | | | | | GCP | | | P | | M | | | 2 | | 4 | SALEABLE | |
| KEY B, W/ CPA, LIGHT GRAY | 33471-0468 | | B | | | | | | | GCP | | | P | | M | CPA | | 2 | | | | |
| KEY A, BLACK | 33471-0467 | A | | | | | | | | GCP | | | P | | M | | | | 3 | 4 | SALEABLE | |
| KEY B, LIGHT GRAY | 33471-0466 | | B | | | | | | | GCP | | | P | | M | | 1 | 2 | | | | |
| KEY D W/ CPA, STONE GRAY | 33471-0465 | | | | | | | D | GCO | | | | P | | M | CPA | | | | | SALEABLE | |
| KEY C W/ CPA, DARK GRAY | 33471-0464 | | | | | | C | | GCO | | | | P | | M | CPA | | | | | SALEABLE | |
| KEY D, STONE GRAY | 33471-0463 | | | | | | | D | GCO | | | | P | | M | | | | | | SALEABLE | |
| KEY C, DARK GRAY | 33471-0462 | | | | | | C | | GCO | | | | P | | M | | | | | | SALEABLE | |
| KEY A W/ CPA & ERGO. CAP, BLACK | 33471-0461 | A | | | | | | | | | GCEO | | P | | M | CPA | | | | | SALEABLE | |
| VOID KEY | 33471-0460 | | | | | | | | | | | | | | | | | | | | | |
| KEY A, BLACK | 33471-0459 | A | | | | | | | | GCP | | | P | | M | | | | 3 | | SALEABLE | |
| KEY A W/ SHRT. BAR, BLACK | 33471-0458 | A | | | | | | | | GCP | | | | PS | M | | 1 | | | 4 | SALEABLE | |
| KEY D W/ SHRT. BAR, GREEN | 33471-0457 | | | | D | | | | | GCP | | | | PS | M | | | | | 4 | NOT RECOMMENDED | SEE P/N 33471-0488 |
| VOID KEY | 33471-0456 | | | | | | | | | | | | | | | | | | | | | |
| KEY D W/ SHRT. BAR, GREEN | 33471-0455 | | | | D | | | | | GCP | | | | PS | M | | 1 | 2 | 3 | 4 | NOT RECOMMENDED | SEE P/N 33471-0487 |
| KEY C W/ SHRT. BAR, BROWN | 33471-0454 | | | C | | | | | | GCP | | | | PS | M | | 1 | 2 | 3 | 4 | NOT RECOMMENDED | SEE P/N 33471-0486 |
| KEY B W/ SHRT. BAR, LT. GRAY | 33471-0453 | | B | | | | | | | GCP | | | | PS | M | | 1 | 2 | 3 | 4 | | |
| KEY A W/ SHRT. BAR, BLACK | 33471-0452 | A | | | | | | | | GCP | | | | PS | M | | 1 | 2 | 3 | 4 | SALEABLE | |
| KEY A W/ SHRT. BAR, BLACK | 33471-0451 | A | | | | | | | | GCP | | | | PS | M | | | | 3 | 4 | SALEABLE | |
| VOID KEY | 33471-0450 | | | | | | | | | | | | | | | | | | | | | |
| KEY D W/ CPA & SHRT. BAR, GREEN | 33471-0449 | | | | D | | | | GCO | | | | | PS | M | CPA | | | | | NOT RECOMMENDED | SEE P/N 33471-0485 |
| KEY C W/ CPA & SHRT. BAR, BROWN | 33471-0448 | | | C | | | | | GCO | | | | | PS | M | CPA | | | | | NOT RECOMMENDED | SEE P/N 33471-0484 |
| KEY B W/ CPA & SHRT. BAR, LT. GRAY | 33471-0447 | | B | | | | | | GCO | | | | | PS | M | CPA | | | | | | |
| KEY A W/ CPA & SHRT. BAR, BLACK | 33471-0446 | A | | | | | | | GCO | | | | | PS | M | CPA | | | | | SALEABLE | |
| VOID KEY | 33471-0445 | | | | | | | | | | | | | | | | | | | | | |
| KEY D, GREEN | 33471-0444 | | | | D | | | | | GCP | | | P | | M | | 1 | 2 | 3 | 4 | NOT RECOMMENDED | SEE P/N 33471-0483 |
| KEY C, BROWN | 33471-0443 | | | C | | | | | | GCP | | | P | | M | | 1 | 2 | 3 | 4 | NOT RECOMMENDED | SEE P/N 33471-0482 |
| KEY B, LT. GRAY | 33471-0442 | | B | | | | | | | GCP | | | P | | M | | 1 | 2 | 3 | 4 | | |
| KEY A, BLACK | 33471-0441 | A | | | | | | | | GCP | | | P | | M | | 1 | 2 | 3 | 4 | SALEABLE | |

BLOCKED TERMINAL

CAVITY WITH A NUMBER INDICATES BLOCKED TERMINAL POSITION
CAVITY WITHOUT A NUMBER INDICATES OPEN TERMINAL POSITION

| DESCRIPTION | COLOR | MATERIAL |
|---|---|---|
| RING SEAL | BURNT ORANGE | INHERENTLY LUBRICATED SILICONE |
| CPA | BRIGHT RED | PBT GF30 |
| MAT SEAL | LIGHT BLUE | INHERENTLY LUBRICATED SILICONE |
| SHORTING BAR PLR | NATURAL | SPS/NYLON GF20 |
| STANDARD PLR | NATURAL | SPS/NYLON GF20 |
| ERGONOMIC GROMMET CAP, PLUGGED | BLACK | SPS/NYLON GF20 |
| ERGONOMIC GROMMET CAP, OPEN | BLACK | SPS/NYLON GF20 |
| STANDARD GROMMET CAP, PLUGGED | BLACK | SPS/NYLON GF20 |
| STANDARD GROMMET CAP, OPEN | BLACK | SPS/NYLON GF20 |
| HOUSING KEYING OPTION D | STONE GRAY | SPS/NYLON GF20 |
| HOUSING KEYING OPTION C | DARK GRAY | SPS/NYLON GF20 |
| HOUSING KEYING OPTION C | BLACK | SPS/NYLON GF20 |
| HOUSING KEYING OPTION D | GREEN | SPS/NYLON GF20 |
| HOUSING KEYING OPTION C | BROWN | SPS/NYLON GF20 |
| HOUSING KEYING OPTION B | LIGHT GRAY | SPS/NYLON GF20 |
| HOUSING KEYING OPTION A | BLACK | SPS/NYLON GF20 |

BOM/APPLICABLE COMPONENTS TABLE

## TABLE LEGEND

| ABREVIATION | COMPONENT |
|---|---|
| A | HOUSING KEY A |
| B | HOUSING KEY B |
| C | HOUSING KEY C |
| D | HOUSING KEY D |
| GCO | GROMMET CAP, STANDARD, OPEN |
| GCP | GROMMET CAP, STANDARD, PLUGGED |
| GCEO | GROMMET CAP, ERGONOMIC, OPEN |
| GCEP | GROMMET CAP, ERGONOMIC, PLUGGED |
| M | MAT SEAL |
| P | PLR, STANDARD |
| PS | PLR, SHRT. BAR LIFTER |
| R | RING SEAL |
| CPA | CPA |

THIS DRAWING CONTAINS INFORMATION THAT IS PROPRIETARY TO MOLEX ELECTRONIC TECHNOLOGIES, LLC AND SHOULD NOT BE USED WITHOUT WRITTEN PERMISSION

FUNCTIONAL SYMBOLS: FA = 0, FC = 0, FP = 0

DIVISIONAL SYMBOLS

| DIMENSION UNITS | SCALE |
|---|---|
| MM | 1:1 |

GENERAL TOLERANCES (UNLESS SPECIFIED)

| | |
|---|---|
| ANGULAR TOL | ± 3' |
| 4 PLACES | ± |
| 3 PLACES | ± |
| 2 PLACES | ± 0.100 |
| 1 PLACE | ± 0.30 |
| 0 PLACES | ± |

DRAFT WHERE APPLICABLE MUST REMAIN WITHIN DIMENSIONS

CURRENT REV DESC: SEE REVISION TABLE

STATUS: Production
DRWN: Srikanth CV 2026-06-11
CHK'D: Chaitra D 2026-06-15
APPR: Gurunandan GA 2026-06-15

THIRD ANGLE PROJECTION | DRAWING: D-SIZE | SERIES: 33471

molex

MX150 1X4 RECEPTACLE
SEALED ASSEMBLY MAT SEAL

PRODUCT CUSTOMER DRAWING

| DOCUMENT NUMBER | DOC TYPE | DOC PART | REVISION |
|---|---|---|---|
| SD-33471-041 | PSD | 002 | W14 |

MATERIAL NUMBER | CUSTOMER: GENERAL MARKET | SHEET NUMBER: 6 OF 8

FORMAT TC-Engineer42
REVISION: B
DATE: 2002/08/01

BOM SHEET 3

| ASSEMBLY DESCRIPTION | ASSEMBLY PART NUMBER | A | B | C | D | C | C | D | A | GCO | GCP | GCEO | GCEP | P | PS | M | CPA | 1 | 2 | 3 | 4 | STATUS | COMMENTS |
|---|---|---|---|---|---|---|---|---|---|---|---|---|---|---|---|---|---|---|---|---|---|---|---|
| KEY A W/ CPA, BLACK | 33471-0700 | A | | | | | | | | | GCP | | | P | | M | CPA | | 2 | 3 | | SALEABLE | |
| KEY A W/ CPA, BLACK | 33471-0499 | A | | | | | | | | | GCP | | | P | | M | CPA | 1 | | | | SALEABLE | |
| KEY B W/CPA, LT.GRAY | 33471-0498 | | B | | | | | | | | GCP | | | P | | M | CPA | | | 3 | 4 | SALEABLE | |
| KEY A W/ CPA, BLACK | 33471-0497 | A | | | | | | | | | GCP | | | P | | M | CPA | | | 3 | 4 | SALEABLE | |
| KEY A W/ CPA, BLACK | 33471-0496 | A | | | | | | | | | GCP | | | P | | M | CPA | | 2 | 3 | 4 | SALEABLE | |
| KEY A , BLACK | 33471-0495 | A | | | | | | | | | GCP | | | P | | M | | 1 | | | | SALEABLE | |
| KEY B, LT.GRAY | 33471-0494 | | B | | | | | | | | GCP | | | P | | M | | | 2 | 3 | | SALEABLE | |
| KEY A W/ CPA, BLACK | 33471-0493 | A | | | | | | | | | GCP | | | P | | M | CPA | | 2 | | | SALEABLE | |
| KEY A W/ CPA & SHRT. BAR, YELLOW | 33471-0492 | | | | | | | | A | GCO | | | | | PS | M | CPA | | | | | SALEABLE | |
| KEY A W/ CPA, YELLOW | 33471-0491 | | | | | | | | A | GCO | | | | P | | M | CPA | | | | | SALEABLE | |
| KEY A W/ CPA, BLACK | 33471-0490 | A | | | | | | | | | GCP | | | P | | M | CPA | | | 3 | | SALEABLE | |
| KEY A , BLACK | 33471-0489 | A | | | | | | | | | GCP | | | P | | M | | | 2 | | | SALEABLE | |
| KEY D W/ SHRT. BAR, STONE GRAY | 33471-0488 | | | | | | | D | | | GCP | | | | PS | M | | | | | 4 | SALEABLE | |
| KEY D W/ SHRT. BAR, STONE GRAY | 33471-0487 | | | | | | | D | | | GCP | | | | PS | M | | 1 | 2 | 3 | 4 | SALEABLE | |
| KEY C W/ SHRT. BAR, DARK GRAY | 33471-0486 | | | | | | C | | | | GCP | | | | PS | M | | 1 | 2 | 3 | 4 | SALEABLE | |
| KEY D W/ CPA & SHRT. BAR, STONE GRAY | 33471-0485 | | | | | | | D | | GCO | | | | | PS | M | CPA | | | | | SALEABLE | |
| KEY C W/ CPA & SHRT. BAR, DARK GRAY | 33471-0484 | | | | | | C | | | GCO | | | | | PS | M | CPA | | | | | SALEABLE | |
| KEY D, STONE GRAY | 33471-0483 | | | | | | | D | | | GCP | | | P | | M | | 1 | 2 | 3 | 4 | SALEABLE | |
| KEY C, DARK GRAY | 33471-0482 | | | | | | C | | | | GCP | | | P | | M | | 1 | 2 | 3 | 4 | SALEABLE | |
| KEY D W/ SHRT. BAR, STONE GRAY | 33471-0481 | | | | | | | D | | GCO | | | | | PS | M | | | | | | SALEABLE | |

BLOCKED TERMINAL

CAVITY WITH A NUMBER INDICATES BLOCKED TERMINAL POSITION
CAVITY WITHOUT A NUMBER INDICATES OPEN TERMINAL POSITION

| DESCRIPTION | COLOR | MATERIAL |
|---|---|---|
| RING SEAL | BURNT ORANGE | INHERENTLY LUBRICATED SILICONE |
| CPA | BRIGHT RED | PBT GF30 |
| MAT SEAL | LIGHT BLUE | INHERENTLY LUBRICATED SILICONE |
| SHORTING BAR PLR | NATURAL | SPS/NYLON GF20 |
| STANDARD PLR | NATURAL | SPS/NYLON GF20 |
| ERGONOMIC GROMMET CAP, PLUGGED | BLACK | SPS/NYLON GF20 |
| ERGONOMIC GROMMET CAP, OPEN | BLACK | SPS/NYLON GF20 |
| STANDARD GROMMET CAP, PLUGGED | BLACK | SPS/NYLON GF20 |
| STANDARD GROMMET CAP, OPEN | BLACK | SPS/NYLON GF20 |
| HOUSING KEYING OPTION A | YELLOW | SPS/NYLON GF20 |
| HOUSING KEYING OPTION D | STONE GRAY | SPS/NYLON GF20 |
| HOUSING KEYING OPTION C | DARK GRAY | SPS/NYLON GF20 |
| HOUSING KEYING OPTION C | BLACK | SPS/NYLON GF20 |
| HOUSING KEYING OPTION D | GREEN | SPS/NYLON GF20 |
| HOUSING KEYING OPTION C | BROWN | SPS/NYLON GF20 |
| HOUSING KEYING OPTION B | LIGHT GRAY | SPS/NYLON GF20 |
| HOUSING KEYING OPTION A | BLACK | SPS/NYLON GF20 |

BOM/APPLICABLE COMPONENTS TABLE

## TABLE LEGEND

| ABREVIATION | COMPONENT |
|---|---|
| A | HOUSING KEY A |
| B | HOUSING KEY B |
| C | HOUSING KEY C |
| D | HOUSING KEY D |
| GCO | GROMMET CAP, STANDARD, OPEN |
| GCP | GROMMET CAP, STANDARD, PLUGGED |
| GCEO | GROMMET CAP, ERGONOMIC, OPEN |
| GCEP | GROMMET CAP, ERGONOMIC, PLUGGED |
| M | MAT SEAL |
| P | PLR, STANDARD |
| PS | PLR, SHRT. BAR LIFTER |
| R | RING SEAL |
| CPA | CPA |

THIS DRAWING CONTAINS INFORMATION THAT IS PROPRIETARY TO MOLEX ELECTRONIC TECHNOLOGIES, LLC AND SHOULD NOT BE USED WITHOUT WRITTEN PERMISSION

FUNCTIONAL SYMBOLS: FA = 0, FC = 0, FP = 0

DIVISIONAL SYMBOLS

DIMENSION UNITS: MM
SCALE: 1:1

GENERAL TOLERANCES (UNLESS SPECIFIED)

| | |
|---|---|
| ANGULAR TOL | ± 3° |
| 4 PLACES | ± |
| 3 PLACES | ± |
| 2 PLACES | ± 0.100 |
| 1 PLACE | ± 0.30 |
| 0 PLACES | ± |

DRAFT WHERE APPLICABLE MUST REMAIN WITHIN DIMENSIONS

CURRENT REV DESC: SEE REVISION TABLE

STATUS: Production
DRWN: Srikanth CV 2026-06-11
CHK'D: Chaitra D 2026-06-15
APPR: Gurunandan GA 2026-06-15

THIRD ANGLE PROJECTION
DRAWING: D-SIZE
SERIES: 33471

molex

MX150 1X4 RECEPTACLE
SEALED ASSEMBLY MAT SEAL

PRODUCT CUSTOMER DRAWING

| DOCUMENT NUMBER | DOC TYPE | DOC PART | REVISION |
|---|---|---|---|
| SD-33471-041 | PSD | 002 | W14 |

MATERIAL NUMBER
CUSTOMER: GENERAL MARKET
SHEET NUMBER: 7 OF 8

W9

BOM SHEET 4 ( MID-VOLT ASSY).

| ASSEMBLY DESCRIPTION | ASSEMBLY PART NUMBER | A | A1 | B | C | D | C | C | D | A | GCO | GCP | GCEO | GCEP | P | P1 | PS | M | CPA | 1 | 2 | 3 | 4 | STATUS | COMMENTS |
|---|---|---|---|---|---|---|---|---|---|---|---|---|---|---|---|---|---|---|---|---|---|---|---|---|---|
| MID-VOLT KEY A W/ CPA, LIGHT BLUE | 3003634111 | | A1 | | | | | | | | GCO | | | | | P1 | | M | CPA | | | | | SALEABLE | |
| MID-VOLT KEY A W/ CPA, LIGHT BLUE | 300363-4016 | A | | | | | | | | | | GCP | | | P | | | M | CPA | 1 | 2 | 3 | 4 | CONCEPT DESIGN | |
| MID-VOLT KEY A W/ CPA, LIGHT BLUE | 300363-4011 | A | | | | | | | | | GCO | | | | P | | | M | CPA | | | | | SALEABLE | |
| MID-VOLT KEY A W/O CPA, LIGHT BLUE | 300363-4006 | A | | | | | | | | | | GCP | | | P | | | M | | 1 | 2 | 3 | 4 | CONCEPT DESIGN | |
| MID-VOLT KEY A W/O CPA, LIGHT BLUE | 300363-4001 | A | | | | | | | | | GCO | | | | P | | | M | | | | | | CONCEPT DESIGN | |

BLOCKED TERMINAL

CAVITY WITH A NUMBER INDICATES BLOCKED TERMINAL POSITION
CAVITY WITHOUT A NUMBER INDICATES OPEN TERMINAL POSITION

| DESCRIPTION | COLOR | MATERIAL |
|---|---|---|
| RING SEAL | BURNT ORANGE | INHERENTLY LUBRICATED SILICONE |
| CPA | BRIGHT RED | PBT GF30 |
| MAT SEAL | LIGHT BLUE | INHERENTLY LUBRICATED SILICONE |
| SHORTING BAR PLR | NATURAL | SPS/NYLON GF20 |
| MID-VOLT PLR | BLACK | SPS/NYLON GF20 |
| MID-VOLT PLR | NATURAL | SPS/NYLON GF20 |
| ERGONOMIC GROMMET CAP, PLUGGED | BLACK | SPS/NYLON GF20 |
| ERGONOMIC GROMMET CAP, OPEN | BLACK | SPS/NYLON GF20 |
| STANDARD GROMMET CAP, PLUGGED | BLACK | SPS/NYLON GF20 |
| STANDARD GROMMET CAP, OPEN | BLACK | SPS/NYLON GF20 |
| HOUSING KEY A (MID-VOLT) | LIGHT BLUE | SPS/NYLON GF20 |
| HOUSING KEY A (MID-VOLT) | LIGHT BLUE | SPS/NYLON GF20 |

BOM/APPLICABLE COMPONENTS TABLE

## TABLE LEGEND

| ABREVIATION | COMPONENT | |
|---|---|---|
| A | HOUSING KEY A (MID-VOLT) W/ GEOMETRY CHANGES | W13 |
| A1 | HOUSING KEY A (MID-VOLT) W/O GEOMETRY CHANGES | W13 |
| | | |
| | | |
| GCO | GROMMET CAP, STANDARD, OPEN | |
| GCP | GROMMET CAP, STANDARD, PLUGGED | |
| GCEO | GROMMET CAP, ERGONOMIC, OPEN | |
| GCEP | GROMMET CAP, ERGONOMIC, PLUGGED | |
| M | MAT SEAL | |
| P | PLR, MID-VOLT W/ GEOMETRY CHANGES | W13 |
| P1 | PLR, MID-VOLT W/O GEOMETRY CHANGES | W13 |
| R | RING SEAL | |
| CPA | CPA | |

THIS DRAWING CONTAINS INFORMATION THAT IS PROPRIETARY TO MOLEX ELECTRONIC TECHNOLOGIES, LLC AND SHOULD NOT BE USED WITHOUT WRITTEN PERMISSION

FUNCTIONAL SYMBOLS: EA = 0, EC = 0, EP = 0

DIVISIONAL SYMBOLS

DIMENSION UNITS: MM
SCALE: 1:1

GENERAL TOLERANCES (UNLESS SPECIFIED)

| | |
|---|---|
| ANGULAR TOL | ± 3' |
| 4 PLACES | ± |
| 3 PLACES | ± |
| 2 PLACES | ± 0.100 |
| 1 PLACE | ± 0.30 |
| 0 PLACES | ± |

DRAFT WHERE APPLICABLE MUST REMAIN WITHIN DIMENSIONS

CURRENT REV DESC: SEE REVISION TABLE

STATUS: Production
DRWN: Srikanth CV 2026-06-11
CHK'D: Chaitra D 2026-06-15
APPR: Gurunandan GA 2026-06-15

THIRD ANGLE PROJECTION

DRAWING: D-SIZE
SERIES: 33471

molex

MX150 1X4 RECEPTACLE
SEALED ASSEMBLY MAT SEAL

PRODUCT CUSTOMER DRAWING

| DOCUMENT NUMBER | DOC TYPE | DOC PART | REVISION |
|---|---|---|---|
| SD-33471-041 | PSD | 002 | W14 |

MATERIAL NUMBER
CUSTOMER: GENERAL MARKET
SHEET NUMBER: 8 OF 8

FORMAT: TC-Grainer0
TEMPLATE: 0
DATE: 2023/08/01

| TABLE OF CONTENTS | |
|---|---|
| SHEET NO. | SHEET DESCRIPTION |
| 1 | NOTES AND BOM |
| 2 | CPA DETAIL |

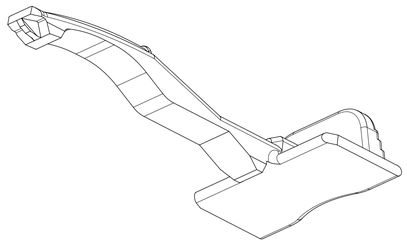

SCALE 5:1

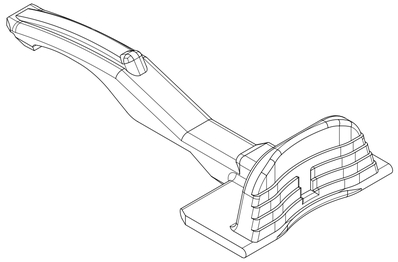

SCALE 5:1

CPA NOTES: VALID UNLESS OTHERWISE SPECIFIED

1. GENERAL:
a. APPLICATION SPECIFICATION SEE: AS-33611-001 AND AS-33472-100
DESIGNED TO MATE WITH RECEPTACLE SEALED ASSEMBLY AS SPECIFIED IN THE BOM
b. PRODUCT SPECIFICATION SEE: PS-33472-000 AND PS-33471-000 AND PS-33476-000.
c. PACKAGING SPECIFICATION SEE: PK-30907-812.
d. PARTS MUST BE IN COMPLIANCE TO MOLEX CHEMICAL SUBSTANCES FOR PRODUCTS AND PACKAGING SPECIFICATION: QEHS-699000-300
e. DATA MUST BE SUBMITTED UNDER THE MOLEX PART NUMBER TO IMDS (COMPANY ID#13255)

2. DESIGN - MATERIALS:
a. PBT GF30
b. RED

3. DESIGN GEOMETRY:
a. THIS IS A 100% CAD GENERATED PART. THE CAD MATHEMATICAL DATA IS THE MASTER FOR THIS PART. FOR DIMENSIONAL OR ANY INFORMATION NOT SHOWN ON THIS DRAWING, ANALYZE THE CAD MODEL.
b. GEOMETRIC DIMENSIONS AND TOLERANCES PER ASME Y14.5M - 1994
c. EDGES AND UNDIMENSIONED DETAILS PER ISO13715
d. CORNERS SHOWN AS SHARP TO BE R 0.2 MAX.
e. VISUAL DEFECTS SHALL MEET COSMETIC STANDARDS PS-45499-002 (CLASS B).

| MOLEX PART NUMBER | STATUS | MATING ASSEMBLY DESCRIPTION | MATING ASSEMBLY DRAWING |
|---|---|---|---|
| 33611-0001 | SALEABLE | MX150 1X2 WAY RECEPTACLE MAT SEAL | SD-33471-021 |
| | | MX150 1X3 WAY RECEPTACLE MAT SEAL | SD-33471-031 |
| | | MX150 1X4 WAY RECEPTACLE MAT SEAL | SD-33471-041 |
| | | MX150 1X5 WAY RECEPTACLE MAT SEAL | SD-33471-051 |
| | | MX150 1X6 WAY RECEPTACLE MAT SEAL | SD-33471-061 |
| | | MX150 2X2 WAY RECEPTACLE MAT SEAL | SD-33472-041 |
| | | MX150 2X3 WAY RECEPTACLE MAT SEAL | SD-33472-061 |
| | | MX150 2X3 WAY RECEPTACLE MAT SEAL W/CLIPSLOT | SD-33472-071 |
| | | MX150 2X4 WAY RECEPTACLE MAT SEAL | SD-33472-081 |
| | | MX150 2X4 WAY RECEPTACLE MAT SEAL W/CLIPSLOT | SD-33472-091 |
| | | MX150 2X6 WAY RECEPTACLE MAT SEAL | SD-33472-121 |
| | | MX150 2X6 WAY RECEPTACLE MAT SEAL W/CLIPSLOT | SD-33472-131 |
| | | MX150 2X8 WAY RECEPTACLE MAT SEAL | SD-33472-161 |
| | | MX150 2X10 WAY RECEPTACLE MAT SEAL | SD-33472-201 |
| | | MX150 HYBRID 16 WAY | SD-33476-161 |
| | | MX150 HYBRID 16 WAY W/CLIP SLOT | SD-33476-181 |

| REV | DESCRIPTION |
|---|---|
| A3 | DOCUMENT TYPE CHANGED FROM SD-33611-001 PDD TO SD-33611-001 PSD |
| A2 | NX RE-MASTERING |
| A | INITIAL RELEASE |

| SYMBOLS | |
|---|---|
| A = 0 | |
| E = 0 | |
| B = 0 | |
| S = 0 | |
| = 0 | |
| C = 0 | |
| = 0 | |
| = 0 | |
| V = 0 | |

THIS DRAWING CONTAINS INFORMATION THAT IS PROPRIETARY TO MOLEX ELECTRONIC TECHNOLOGIES, LLC AND SHOULD NOT BE USED WITHOUT WRITTEN PERMISSION

| DIMENSION UNITS | SCALE |
|---|---|
| mm | 10:1 |

| GENERAL TOLERANCES (UNLESS SPECIFIED) | | |
|---|---|---|
| ANGULAR TOL | ± | 3.0 ° |
| 4 PLACES | ± | |
| 3 PLACES | ± | |
| 2 PLACES | ± | 0.1 |
| 1 PLACE | ± | 0.3 |
| 0 PLACES | ± | |

DRAFT WHERE APPLICABLE MUST REMAIN WITHIN DIMENSIONS

CURRENT REV DESC:

EC NO: 620500
DRWN: MSELANGOVAN 2019/07/02
CHK'D: KBORUSZEWSKI 2019/07/11
APPR: MVANSLAMBROU 2019/07/13

INITIAL REVISION:
DRWN: RELEASE 2019/06/26
APPR: MVANSLAMBROU 2019/07/13

molex

1.5MM STANDARD CONNECTOR
CONNECTOR POS. ASSURANCE

PRODUCT CUSTOMER DRAWING

| THIRD ANGLE PROJECTION | DRAWING | SERIES | MATERIAL NUMBER | CUSTOMER | SHEET NUMBER |
|---|---|---|---|---|---|
| | D-SIZE | 33611 | SEE BOM | GENERAL MARKET | 1 OF 2 |

| DOCUMENT NUMBER | DOC TYPE | DOC PART | REVISION |
|---|---|---|---|
| SD-33611-001 | PSD | 001 | A3 |

| DOCUMENT STATUS | P1 | RELEASE DATE | 2019/07/13 12:33:05 |
|---|---|---|---|

FORMAT: master-tb-prod-D
REVISION: 11
DATE: 2018/01/16

# CPA DETAIL

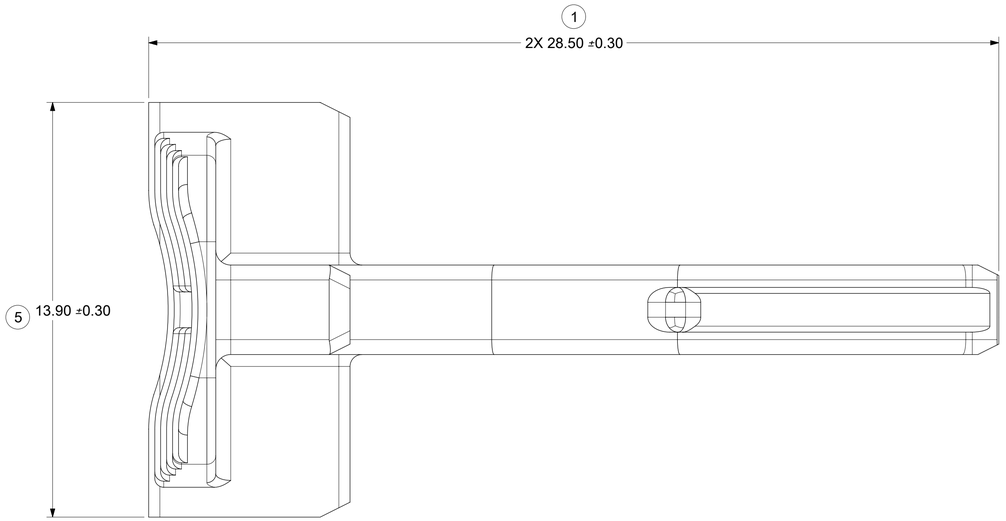


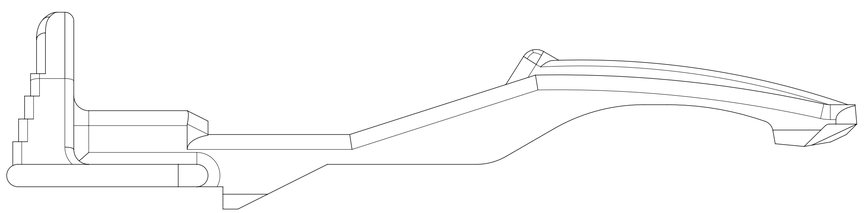

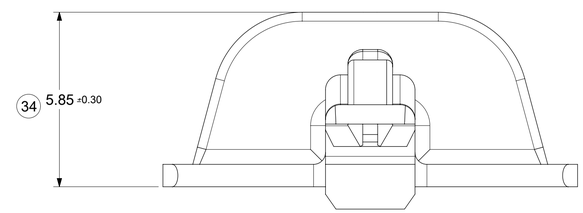


| SYMBOLS | |
|---|---|
| E = | 0 |
| E = | 0 |
| E = | 0 |
| S = | 0 |
| = | 0 |
| C = | 0 |
| = | 0 |
| = | 0 |
| V = | 0 |

THIS DRAWING CONTAINS INFORMATION THAT IS PROPRIETARY TO MOLEX ELECTRONIC TECHNOLOGIES, LLC AND SHOULD NOT BE USED WITHOUT WRITTEN PERMISSION

| DIMENSION UNITS | SCALE |
|---|---|
| mm | 10:1 |

GENERAL TOLERANCES (UNLESS SPECIFIED)

| | | |
|---|---|---|
| ANGULAR TOL | ± | 3.0 ° |
| 4 PLACES | ± | |
| 3 PLACES | ± | |
| 2 PLACES | ± | 0.1 |
| 1 PLACE | ± | 0.3 |
| 0 PLACES | ± | |

DRAFT WHERE APPLICABLE MUST REMAIN WITHIN DIMENSIONS

CURRENT REV DESC:

EC NO: 620500
DRWN: MSELANGOVAN 2019/07/02
CHK'D: KBORUSZEWSKI 2019/07/11
APPR: MVANSLAMBROU 2019/07/13

INITIAL REVISION:
DRWN: RELEASE 2019/06/26
APPR: MVANSLAMBROU 2019/07/13

THIRD ANGLE PROJECTION | DRAWING: D-SIZE | SERIES: 33611

molex

1.5MM STANDARD CONNECTOR
CONNECTOR POS. ASSURANCE

PRODUCT CUSTOMER DRAWING

| DOCUMENT NUMBER | DOC TYPE | DOC PART | REVISION |
|---|---|---|---|
| SD-33611-001 | PSD | 001 | A3 |

| MATERIAL NUMBER | CUSTOMER | SHEET NUMBER |
|---|---|---|
| SEE BOM | GENERAL MARKET | 2 OF 2 |

| DOCUMENT STATUS | P1 | RELEASE DATE | 2019/07/13 12:33:05 |
|---|---|---|---|

TEMPLATE: mpdm-fb-prod-v7
REVISION: R
DATE: 2019-04-18