THIS DRAWING IS UNPUBLISHED. RELEASED FOR PUBLICATION JUN ,1998.
© COPYRIGHT 1998 By Tyco Electronics Japan G.K. ALL RIGHTS RESERVED.

REVISIONS
変更

P	LTR	DESCRIPTION	DATE	DWN	APVD
	E	REVISED PER ECR-23-177478	08AUG2023	SM	JP

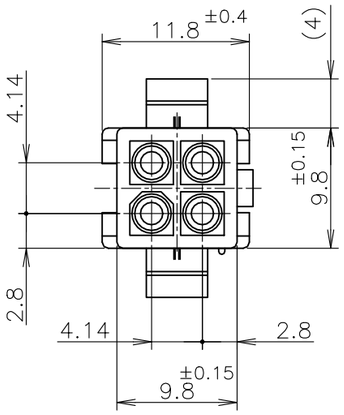

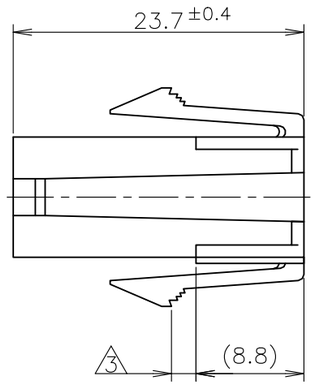

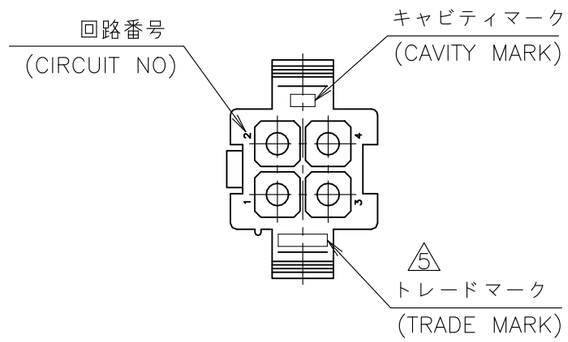

1 使用端子型番は 170359, 170360, 170361, 170362
2 嵌合相手ハウジング型番は 172167
3 適用パネル厚 0.8~2.0mm
4 取付穴打抜方向とハウジングの挿入方向は同じとする。
5 表1参照
6 OBSOLETE PARTS: OBSOLETE CIS STREAMLINING PER D.RENAUD/D.SINISI

1 APPLICABLE CONT P/N: 170359, 170360, 170361, 170362
2 MATING HSG P/N: 172167
3 APPLICABLE PANEL THICKNESS: 0.8~2.0mm
4 HOUSING INSERTION INTO THE PANEL CUT-OUT MUST BE DONE IT THE SAME DIRECTION WITH PUNCH KNOCKING.
5 SEE TABLE 1
6 OBSOLETE PARTS: OBSOLETE CIS STREAMLINING PER D.RENAUD/D.SINISI

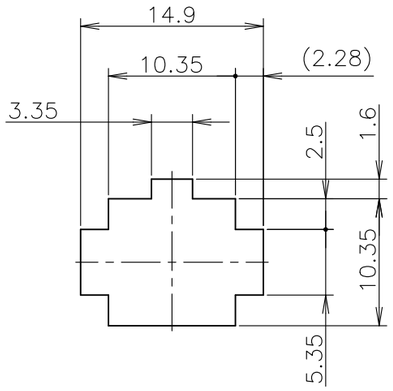

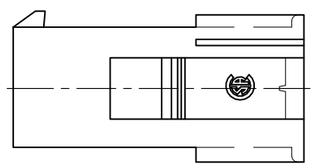

寸法公差は±0.20
(TOLERANCE: ±0.20)

パネル取付穴
(RECOMMENDED PANEL OPENING DIRECTION)

表1 TABLE 1

トレードマーク (TRADE MARK)	生産場所 (MANUFACTURING PLACE)
-AMP OR AMP	日本 (JAPAN)
-+AMP OR AMP	中国 (CHINA (PRC))

	黒 (BLACK)	1-172159-9
6 OBSOLETE	~~青 (BLUE)~~	~~1-172159-6~~
6 OBSOLETE	~~緑 (GREEN)~~	~~1-172159-5~~
	赤 (RED)	1-172159-2
	自然色 (NATURAL)	172159-1
	色 (COLOR)	型番 (P/N)

THIS DRAWING IS A CONTROLLED DOCUMENT.

DIMENSIONS: 単位: 耗 mm

TOLERANCES UNLESS OTHERWISE SPECIFIED: 一般公差
0 PLC ±—
1 PLC ±—
2 PLC ±—
3 PLC ±—
4 PLC ±—
ANGLES ±—
±0.3

MATERIAL 材料: PA66/6 UL94-0
FINISH 仕上:

INSTRUCTION SHEET 取扱説明書: IS-105J
WIRE RANGE 抱合電線断面積: mm²
INSULATION DIA 被覆外径: mmø

DWN N.YAMASAKI 08JUN1998
CHK M.SHINDO 15JUN1998
APVD M.SHINDO 15JUN1998
PRODUCT SPEC 製品規格: 108-5138
APPLICATION SPEC 取付適用規格:
WEIGHT:

TE Connectivity

NAME 名称: 4 POS MINI UNIVERSAL MATE-N-LOCK CONN. CAP HOUSING UL94V-0
4極ミニユニバーサルメイテンロック キャップハウジング UL94V-0

SIZE A3 | CAGE CODE 00779 | DRAWING NO 番号 C-172159 | RESTRICTED TO —

CUSTOMER DRAWING | SCALE 尺度 2:1 | SHEET 1 OF 1 | REV E