© – TE Connectivity. All Rights Reserved.

REVISIONS					
P	LTR	DESCRIPTION	DATE	DWN	APVD
	M1	ECR-26-271605	24FEB2026	ABS	PS

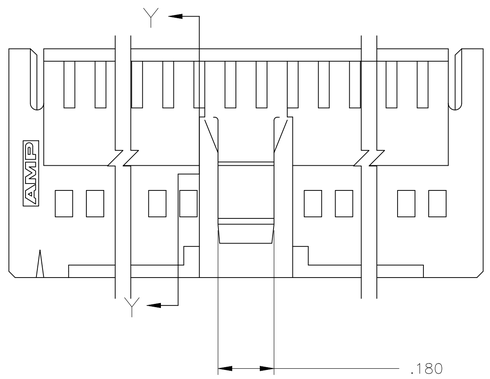

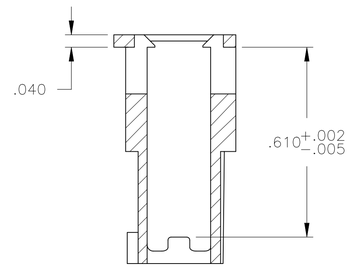

SECTION Y—Y

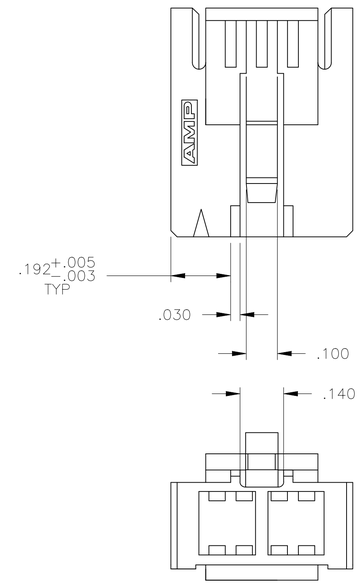

LATCH CONFIGURATION
FOR 6, 8 AND 10 POSN
(SEE TABLE)

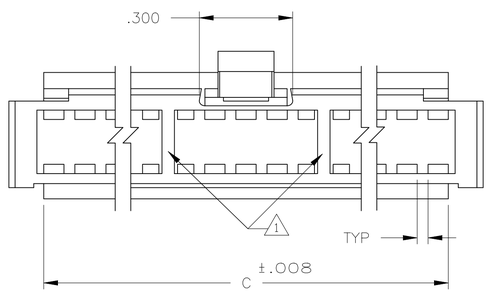

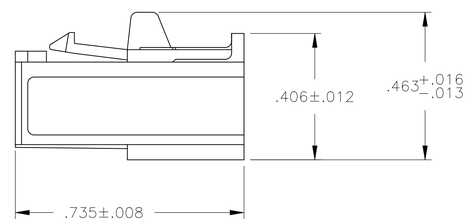

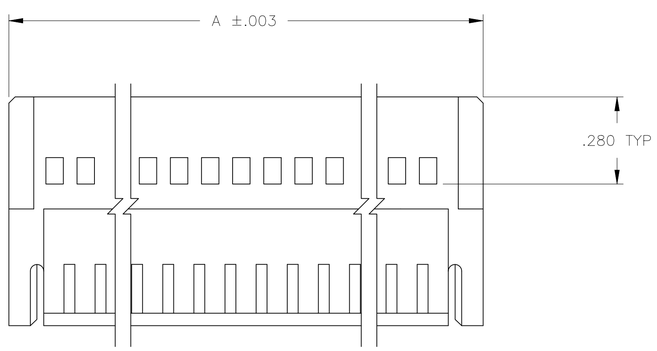

1. SEE TABLE FOR RIB QTY
2. THIS COUPLING SHROUD IS TO BE USED WITH AMPMODU MTE®
   RECEPTACLE ASSEMBLIES WITH GUIDE RIBS
   THE NUMBER OF POSITIONS LISTED EQUALS THE TOTAL
   NUMBER OF POSITIONS WHICH CAN BE
   CONTAINED WITHIN THE COUPLING SHROUD
3. FLAME RETARDANT THERMOPLASTIC, COLOR-BLACK.
4. NOTE DELETED

	RIB QTY	C	A	NO OF POSN	PART NUMBER
OBSOLETE	1	.260	.485	6	1-103681-7
SUPERSEDED BY 1-104500-1	2	2.460	2.685	50	1-103681-6
OBSOLETE	2	1.960	2.185	40	1-103681-5
OBSOLETE	2	1.660	1.885	34	1-103681-4
SUPERSEDED BY 104500-8	2	1.560	1.785	32	1-103681-3
OBSOLETE	2	1.460	1.685	30	1-103681-2
OBSOLETE	2	1.360	1.585	28	1-103681-1
OBSOLETE	2	1.260	1.485	26	1-103681-0
OBSOLETE	2	1.160	1.385	24	103681-9
OBSOLETE	2	1.060	1.285	22	103681-8
SUPERSEDED BY 104500-2	2	.960	1.185	20	103681-7
OBSOLETE	2	.860	1.085	18	103681-6
	1	.760	.985	16	103681-5
OBSOLETE	1	.660	.885	14	103681-4
	1	.560	.785	12	103681-3
	1	.460	.685	10	103681-2
OBSOLETE	1	.360	.585	8	103681-1

THIS DRAWING IS A CONTROLLED DOCUMENT.

DIMENSIONS: INCHES

TOLERANCES UNLESS OTHERWISE SPECIFIED:
0 PLC ± –
1 PLC ± –
2 PLC ± –
3 PLC ± .005
4 PLC ± –
ANGLES ± –

MATERIAL 3

FINISH –

DWN H MOLL 10-7-87
CHK D de JONG 10-7-87
APVD –
PRODUCT SPEC 108-25034
APPLICATION SPEC 114-25026
WEIGHT –

TE Connectivity

NAME COUPLING SHROUD, AMPMODU MTE, .100X.100 C/L, DOUBLE ROW

SIZE	CAGE CODE	DRAWING NO	RESTRICTED TO
A1	00779	C-103681	–

CUSTOMER DRAWING | SCALE 4:1 | SHEET 1 OF 1 | REV M1

4805 (1/15)