TABLE OF CONTENTS	
SHEET NO.	SHEET DESCRIPTION
1	NOTES AND BOM
2	1X2 AND 1X3 CONFIGURATIONS
3	1X4 AND 1X6 CONFIGURATIONS
4	CONVOLUTE INTERFACE/BACKSHELL DETAIL

BILL OF MATERIALS(BOM)

DESCRIPTION	PART NUMBER	CIRCUIT SIZE	CONVOLUTE SIZE	DIRECTION TYPE	CABLE TIE ACCESS	STATUS	MATING ASSEMBLY DRAWING
1X2 WIRE DRESS TYPE 1	160091-2010	1X2	NW 4.5	1	NO	SALEABLE	SD-34900-2001
1X2 WIRE DRESS TYPE 2	160091-2110	1X2	NW 4.5	2	NO	SALEABLE	SD-34900-2001
1X2 WIRE DRESS TYPE 3	160091-2210	1X2	NW 4.5	3	NO	SALEABLE	SD-34900-2001
1X3 WIRE DRESS TYPE 1	160091-3010	1X3	NW 4.5	1	NO	SALEABLE	SD-34900-2001
1X3 WIRE DRESS TYPE 2	160091-3110	1X3	NW 4.5	2	NO	SALEABLE	SD-34900-2001
1X3 WIRE DRESS TYPE 3	160091-3210	1X3	NW 4.5	3	NO	SALEABLE	SD-34900-2001
1X4 WIRE DRESS TYPE 1, CABLE TIE ACCESS	160091-4020	1X4	NW 7.5	1	YES	SALEABLE	SD-34900-6001
1X4 WIRE DRESS TYPE 2, CABLE TIE ACCESS	160091-4120	1X4	NW 7.5	2	YES	SALEABLE	SD-34900-6001
1X4 WIRE DRESS TYPE 3, CABLE TIE ACCESS	160091-4220	1X4	NW 7.5	3	YES	SALEABLE	SD-34900-6001
1X6 WIRE DRESS TYPE 1, CABLE TIE ACCESS	160091-6020	1X6	NW 7.5	1	YES	SALEABLE	SD-34900-6001
1X6 WIRE DRESS TYPE 2, CABLE TIE ACCESS	160091-6120	1X6	NW 7.5	2	YES	SALEABLE	SD-34900-6001
1X6 WIRE DRESS TYPE 3, CABLE TIE ACCESS	160091-6220	1X6	NW 7.5	3	YES	SALEABLE	SD-34900-6001

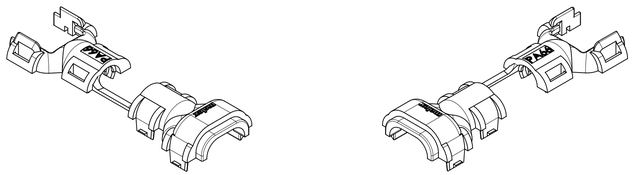

1X2 RECEPTACLE

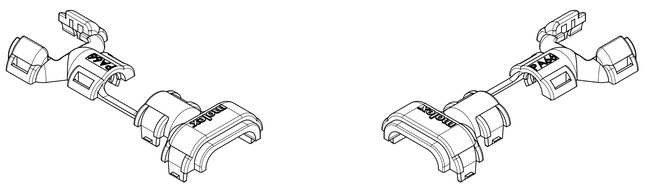

1X3 RECEPTACLE

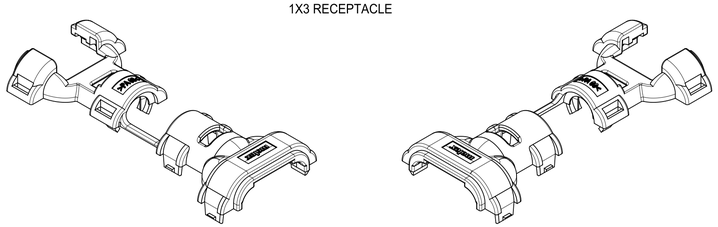

1X4 RECEPTACLE

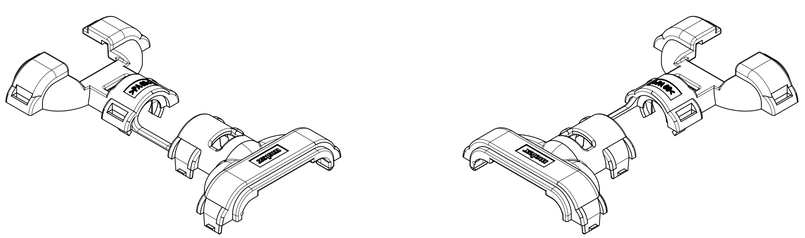

1X6 RECEPTACLE

BACKSHELL NOTES: VALID UNLESS OTHERWISE SPECIFIED

1. GENERAL:

a. APPLICATION SPECIFICATION SEE: AS-34900-0001
- -DESIGNED TO MATE WITH RECEPTACLE SEALED ASSEMBLY AS SPECIFIED IN BOM
- -COMPONENTS ARE OPTIONAL AND MUST BE PURCHASED SEPERATELY
- -BACKSHELL DESIGN IS OWNED BY SCHLEMMER

b. PRODUCT SPECIFICATION
- -THESE PRODUCTS ARE ONE TIME USE ONLY.
- C2 -REMOVAL FORCE OF THE BACKSHELL FROM THE MOLEX CONNECTOR TO BE 110N MIN IN DRY AS MOLDED STATE.
- -REMOVAL FORCE OF SLIT CONVOLUTE FROM THE WIRE DRESS COVER TO BE 20 N MIN.
- -REMOVAL FORCE OF UNSLIT CONVOLUTE FROM THE WIRE DRESS COVER TO BE 20 N MIN.

c. PACKAGING SPECIFICATION SEE PK-31302-118

d. PARTS MUST BE IN COMPLIANCE TO MOLEX CHEMICAL SUBSTANCES FOR PRODUCTS AND PACKAGING SPECIFICATION: QEHS-699000-300

e. DATA MUST BE SUBMITTED UNDER THE MOLEX PART NUMBER TO IMDS (COMPANY ID#13255)

f. FOLLOWING PRODUCTION CODES TO BE PRESENT
- -DATE CODE
- -MOLD CAVITY CODE
- -CONVOLUTE SIZE
- -MOLEX LOGO
- -MATERIAL
- -SUPPLIER PART NUMBER

2. DESIGN - MATERIALS:

a. PA66 0% GLASS FILLED

b. BLACK

3. DESIGN GEOMETRY:

a. THIS IS A 100% CAD GENERATED PART. THE CAD MATHEMATICAL DATA IS THE MASTER FOR THIS PART. FOR DIMENSIONAL OR ANY INFORMATION NOT SHOWN ON THIS DRAWING, ANALYZE THE CAD MODEL.

b. GEOMETRIC DIMENSIONS AND TOLERANCES PER ASME Y14.5M - 2009

c. CORNERS SHOWN AS SHARP TO BE R 0.1.

d. VISUAL DEFECTS SHALL MEET COSMETEIC STANDARD PS-45499-002 (CLASS B).

e. DRAFT OF 2° PRESENT.

f. ALLOWABLE FLASH, PARTING LINES MISMATCH, EJECTOR PINS MARK, AND GATE VESTIGE TO BE +0.30 MAX PROTUSION.

REV	DESCRIPTION
C2	ADDED BACKSHELL STATUS TO NOTES 1.b REMOVE PERFORMANCE
C	MIGRATED TO NX, BALLOON NUMBERS ADDED
B	1X4 / 1X6 COVERS MADE SALEABLE
1	INITIAL RELEASE

FUNCTIONAL SYMBOLS: FA = 0, FC = 0, FD = 0

DIVISIONAL SYMBOLS

THIS DRAWING CONTAINS INFORMATION THAT IS PROPRIETARY TO MOLEX ELECTRONIC TECHNOLOGIES, LLC AND SHOULD NOT BE USED WITHOUT WRITTEN PERMISSION

DIMENSION UNITS	SCALE
mm	1.5:1

GENERAL TOLERANCES (UNLESS SPECIFIED)

ANGULAR TOL	± 3°
4 PLACES	±
3 PLACES	±
2 PLACES	± 0.100
1 PLACE	± 0.30
0 PLACES	±

DRAFT WHERE APPLICABLE MUST REMAIN WITHIN DIMENSIONS

CURRENT REV DESC: MIGRATED TO NX, BALLOON NUMBERS ADDED

STATUS: Production

DRWN:	Yuki Song	2023-02-01
CHK'D:	Yuki Song	2025-04-24
APPR:	Elvis Song	2025-04-24

THIRD ANGLE PROJECTION | DRAWING: D-SIZE | SERIES: 160091

molex

1.2MM RECEPTACLE WDC

PRODUCT CUSTOMER DRAWING

DOCUMENT NUMBER	DOC TYPE	DOC PART	REVISION
SD-160091-0001	PSD	001	C2

MATERIAL NUMBER	CUSTOMER	SHEET NUMBER
SEE BOM	GENERAL MARKET	1 OF 4

FORMAT TC-Format07
REVISION: B
DATE: 2020/08/31

1X2 AND 1X3 CONFIGURATIONS

1X2 RECEPTACLE

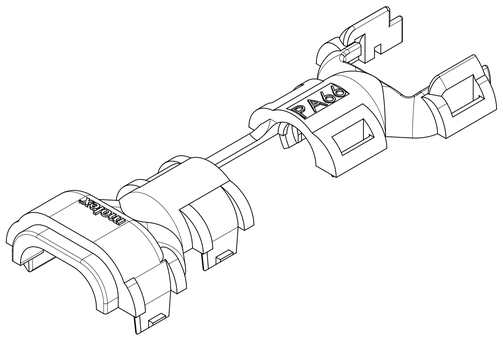

DIRECTION TYPE 1

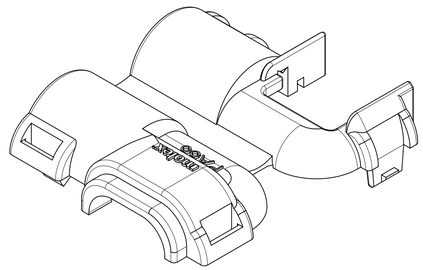

DIRECTION TYPE 2

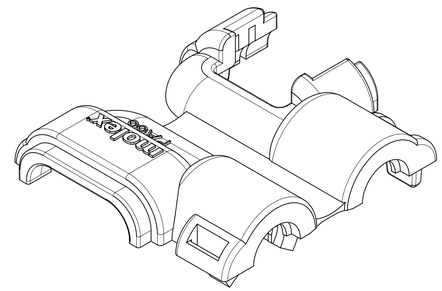

DIRECTION TYPE 3

1X3 RECEPTACLE

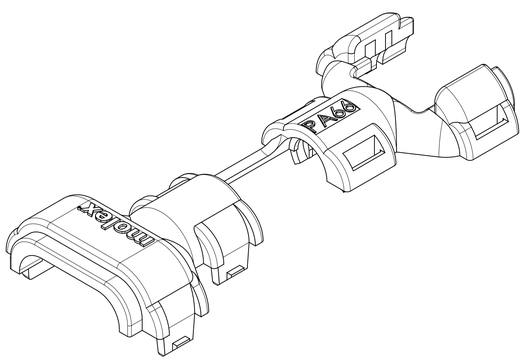

DIRECTION TYPE 1

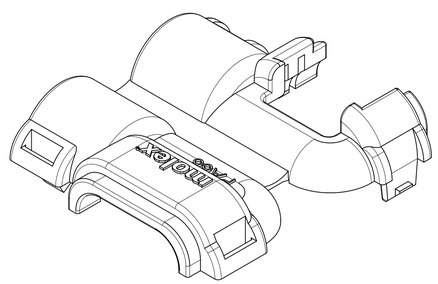

DIRECTION TYPE 2

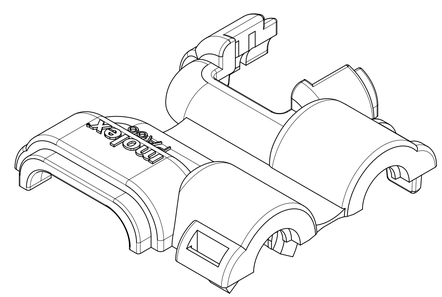

DIRECTION TYPE 3

FUNCTIONAL SYMBOLS	THIS DRAWING CONTAINS INFORMATION THAT IS PROPRIETARY TO MOLEX ELECTRONIC TECHNOLOGIES, LLC AND SHOULD NOT BE USED WITHOUT WRITTEN PERMISSION		
FA = 0	DIMENSION UNITS: mm	SCALE: 3:1	CURRENT REV DESC: MIGRATED TO NX, BALLOON NUMBERS ADDED
FC = 0	GENERAL TOLERANCES (UNLESS SPECIFIED)		
FP = 0	ANGULAR TOL ± 3°		
DIVISIONAL SYMBOLS	4 PLACES ±		
	3 PLACES ±		STATUS: Production
	2 PLACES ± 0.100		DRWN: Yuki Song 2023-02-01
	1 PLACE ± 0.30		CHK'D: Yuki Song 2025-04-24
	0 PLACES ±		APPR: Elvis Song 2025-04-24
	DRAFT WHERE APPLICABLE MUST REMAIN WITHIN DIMENSIONS		

THIRD ANGLE PROJECTION	DRAWING	SERIES	MATERIAL NUMBER	CUSTOMER	SHEET NUMBER
	D-SIZE	160091	SEE BOM	GENERAL MARKET	2 OF 4

molex

1.2MM RECEPTACLE WDC

PRODUCT CUSTOMER DRAWING

DOCUMENT NUMBER	DOC TYPE	DOC PART	REVISION
SD-160091-0001	PSD	001	C2

FORMAT TC-Alpha-H2
REVISION: B
DATE: 2020-09-01

1X4 AND 1X6 CONFIGURATIONS

1X4 RECEPTACLE

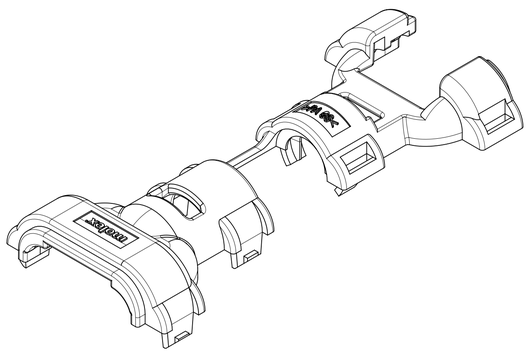

DIRECTION TYPE 1

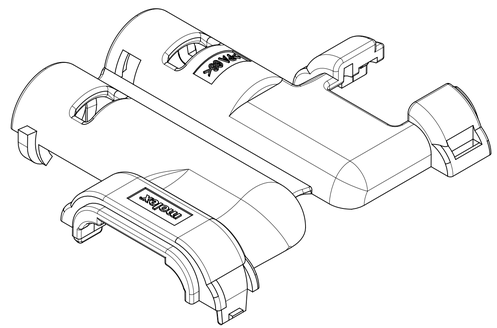

DIRECTION TYPE 2

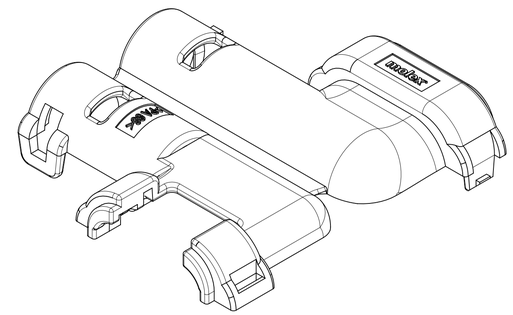

DIRECTION TYPE 3

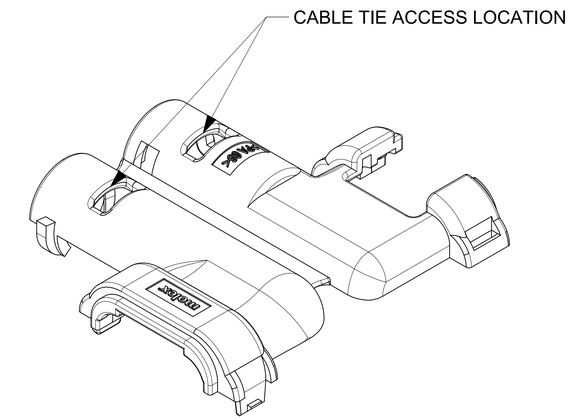

CABLE TIE ACCESS

1X6 RECEPTACLE

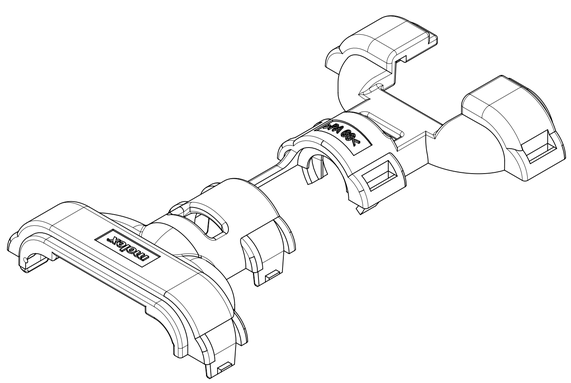

DIRECTION TYPE 1

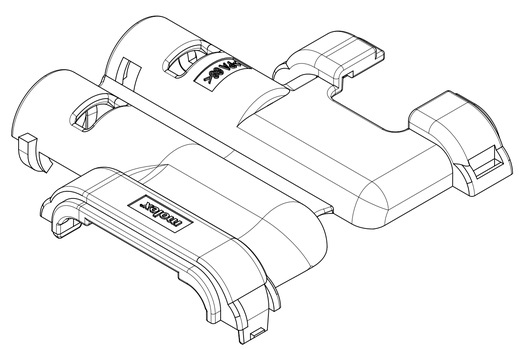

DIRECTION TYPE 2

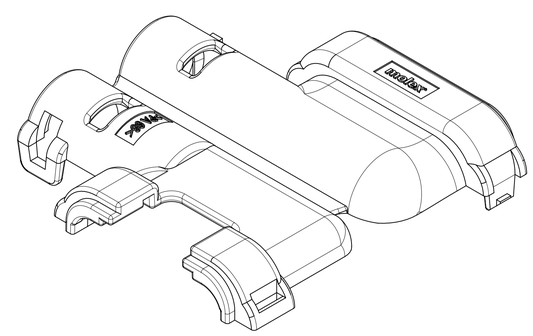

DIRECTION TYPE 3

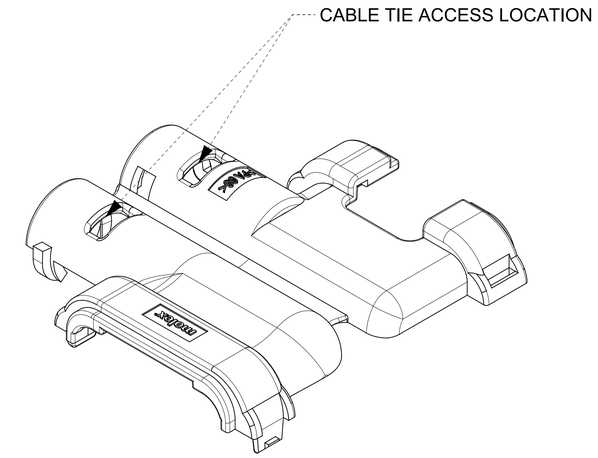

CABLE TIE ACCESS

THIS DRAWING CONTAINS INFORMATION THAT IS PROPRIETARY TO MOLEX ELECTRONIC TECHNOLOGIES, LLC AND SHOULD NOT BE USED WITHOUT WRITTEN PERMISSION

FUNCTIONAL SYMBOLS	
FA =	0
FC =	0
FP =	0
DIVISIONAL SYMBOLS	
DIMENSION UNITS	mm
SCALE	2.5:1
GENERAL TOLERANCES (UNLESS SPECIFIED)	
ANGULAR TOL	± 3'
4 PLACES	±
3 PLACES	±
2 PLACES	± 0.100
1 PLACE	± 0.30
0 PLACES	±
DRAFT WHERE APPLICABLE MUST REMAIN WITHIN DIMENSIONS	

CURRENT REV DESC: MIGRATED TO NX, BALLOON NUMBERS ADDED

STATUS: Production
DRWN: Yuki Song 2023-02-01
CHK'D: Yuki Song 2025-04-24
APPR: Elvis Song 2025-04-24

THIRD ANGLE PROJECTION | DRAWING: D-SIZE | SERIES: 160091

molex

1.2MM RECEPTACLE WDC

PRODUCT CUSTOMER DRAWING

DOCUMENT NUMBER	DOC TYPE	DOC PART	REVISION
SD-160091-0001	PSD	001	C2

MATERIAL NUMBER	CUSTOMER	SHEET NUMBER
SEE BOM	GENERAL MARKET	3 OF 4

CONVOLUTE INTERFACE / BACKSHELL DETAIL

DESCRIPTION	DIMENSIONS					
	A	B	C	D	F	G
1X2 WIRE DRESS OPTION 1	20.50	7.40	6.00	1.40	2.20	61.0
1X2 WIRE DRESS OPTION 2	31.15	7.40	6.00	1.40	2.20	38.0
1X2 WIRE DRESS OPTION 3	31.15	7.40	6.00	1.40	2.20	38.0
1X3 WIRE DRESS OPTION 1	24.60	7.40	6.00	1.40	2.20	61.0
1X3 WIRE DRESS OPTION 2	33.30	7.40	6.00	1.40	2.20	38.0
1X3 WIRE DRESS OPTION 3	33.30	7.40	6.00	1.40	2.20	38.0
1X4 WIRE DRESS OPTION 1	30.16	10.60	7.50	0.90	2.70	71.1
1X4 WIRE DRESS OPTION 2	49.98	10.60	7.50	0.90	2.70	54.8
1X4 WIRE DRESS OPTION 3	49.98	10.60	7.50	0.90	2.70	54.8
1X6 WIRE DRESS OPTION 1	38.16	10.60	7.50	0.90	2.70	71.1
1X6 WIRE DRESS OPTION 2	53.98	10.60	7.50	0.90	2.70	54.8
1X6 WIRE DRESS OPTION 3	53.98	10.60	7.50	0.90	2.70	54.8

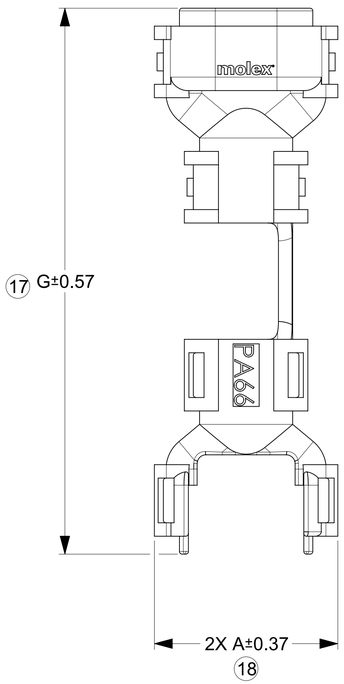

WIRE DRESS OPTION 1

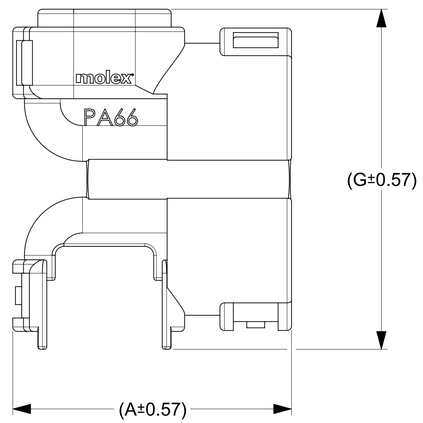

WIRE DRESS OPTION 2 AND 3

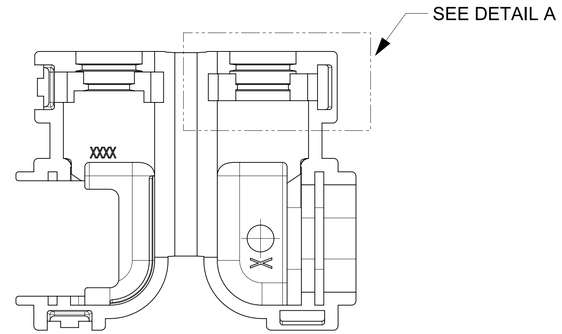

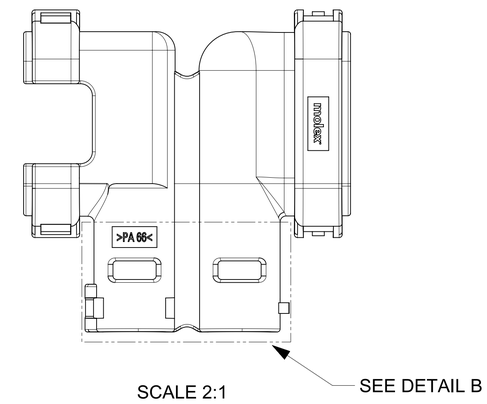

SCALE 2:1

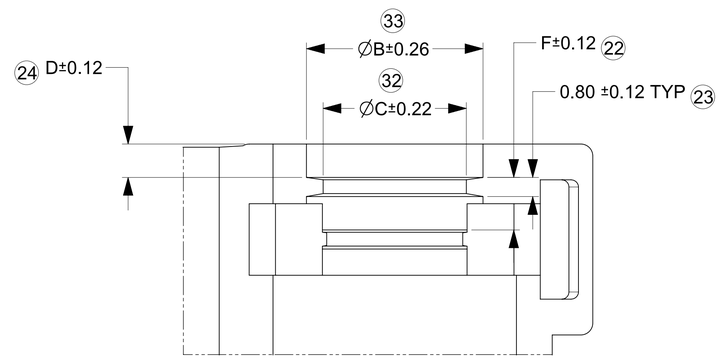

DETAIL A
SCALE 8:1

CONVOLUTE INTERFACE

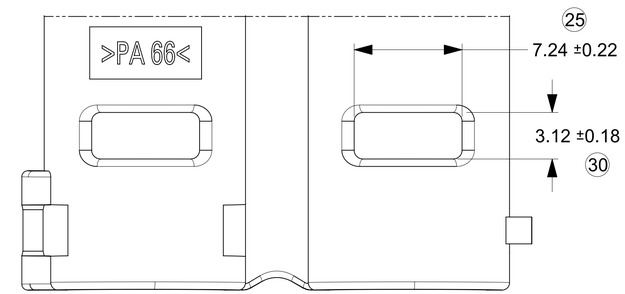

DETAIL B
SCALE 5:1

CABLE TIE ACCESS

THIS DRAWING CONTAINS INFORMATION THAT IS PROPRIETARY TO MOLEX ELECTRONIC TECHNOLOGIES, LLC AND SHOULD NOT BE USED WITHOUT WRITTEN PERMISSION

FUNCTIONAL SYMBOLS: FA = 0, FC = 0, FP = 0

DIVISIONAL SYMBOLS

DIMENSION UNITS	SCALE
mm	3:1

GENERAL TOLERANCES (UNLESS SPECIFIED)	
ANGULAR TOL	± 3'
4 PLACES	±
3 PLACES	±
2 PLACES	± 0.100
1 PLACE	± 0.30
0 PLACES	±

DRAFT WHERE APPLICABLE MUST REMAIN WITHIN DIMENSIONS

CURRENT REV DESC: MIGRATED TO NX, BALLOON NUMBERS ADDED

STATUS: Production
DRWN: Yuki Song 2023-02-01
CHK'D: Yuki Song 2025-04-24
APPR: Elvis Song 2025-04-24

THIRD ANGLE PROJECTION

DRAWING	SERIES
D-SIZE	160091

molex

1.2MM RECEPTACLE WDC

PRODUCT CUSTOMER DRAWING

DOCUMENT NUMBER	DOC TYPE	DOC PART	REVISION
SD-160091-0001	PSD	001	C2

MATERIAL NUMBER	CUSTOMER	SHEET NUMBER
SEE BOM	GENERAL MARKET	4 OF 4