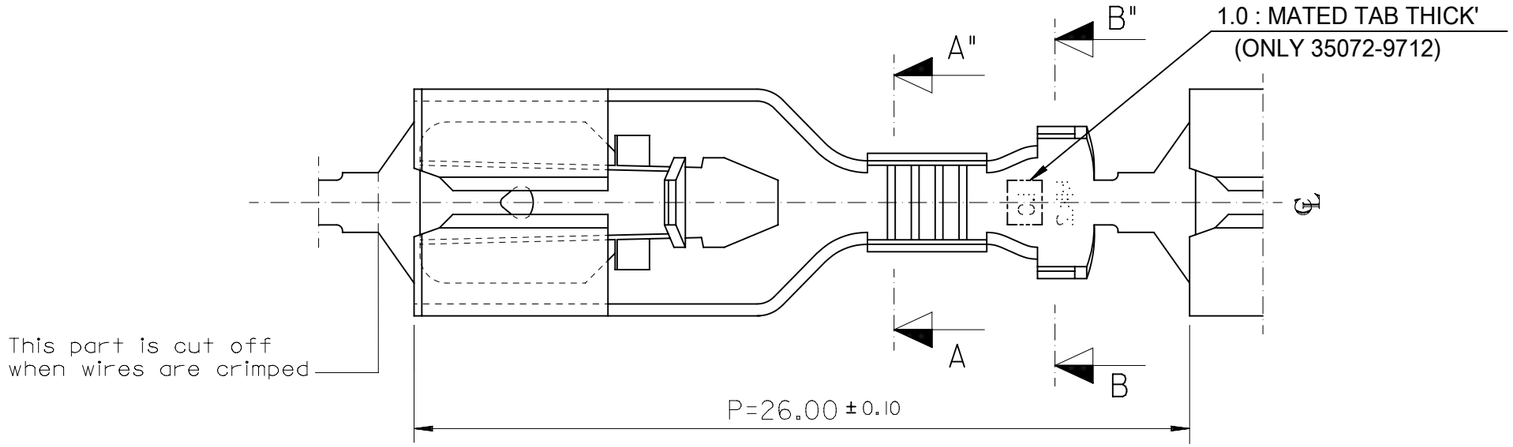

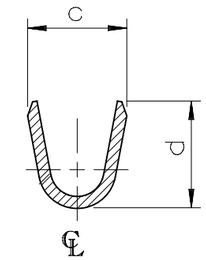

SECTION:A-A"

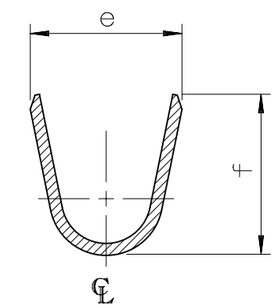

SECTION:B-B"

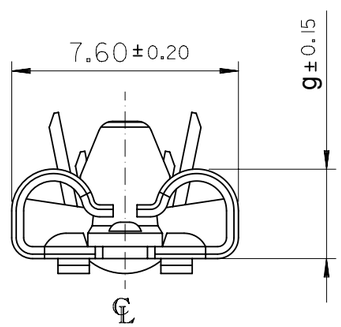

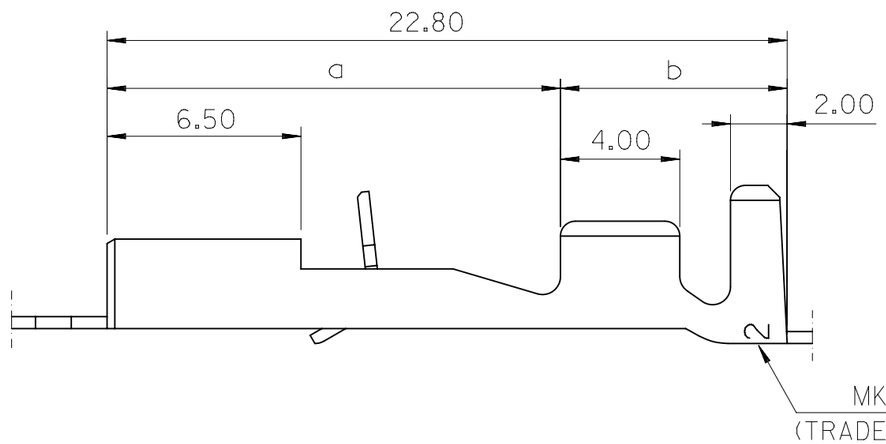

ENG.NO.	a	b	c	d	e	f	g	WIRE SIZE	INSUL.DIA.	MATING TAB THICK'
35072-9702	15.1	7.7	2.6	3.2	4.8	4.8	2.92	AWG#22-18	1.5-3.1	0.8 t
35072-9802	15.1	7.7	3.7	3.6	5.0	5.5		AWG#18-14	2.2-3.4	
35072-9902	14.4	8.4	4.6	5.4	6.8	6.2		AWG#14-10	3.0-5.1	

NOTES

1. MATERIAL: TIN-PLATED BRASS 0.4mm THICK'
2. APPLICABLE HOUSING: 35196-0110
3. MATING TAB WIDTH : 6.35mm

THIS DRAWING CONTAINS INFORMATION THAT IS PROPRIETARY TO MOLEX ELECTRONIC TECHNOLOGIES, LLC AND SHOULD NOT BE USED WITHOUT WRITTEN PERMISSION

DIMENSION UNITS	SCALE
mm	5:1

GENERAL TOLERANCES (UNLESS SPECIFIED)

	MM	INCH
4 PLACES	±	±
3 PLACES	±	±
2 PLACES	± 0.3	±
1 PLACE	± 0.3	±
0 PLACES	±	±
ANGULAR TOL	± 1.0 °	

DRAFT WHERE APPLICABLE MUST REMAIN WITHIN DIMENSIONS

CURRENT REV DESC: OBSOLETED PART NO

EC NO: 625872
DRWN: AKUMAR19 2019/06/12
CHK'D: GB 2019/11/06
APPR: GGA 2019/11/12

INITIAL REVISION:
DRWN: W.Y.YANG 1996/03/19
APPR: C.W.LEE 1996/03/19

THIRD ANGLE PROJECTION | DRAWING: B-SIZE | SERIES: 35196

molex

.250 MP-LOCK RECEPTACLE TERMINAL

PRODUCT CUSTOMER DRAWING

DOCUMENT NUMBER	DOC TYPE	DOC PART	REVISION
SD-35072-9702	PSD	001	B

MATERIAL NUMBER	CUSTOMER	SHEET NUMBER
SEE TABLE	GENERAL MARKET	1 OF 1

DOCUMENT STATUS	P1	RELEASE DATE	2019/11/12 07:17:58

FORMAT: Eng-legal-portrait-prod-B
REVISION: D
DATE: 2018/01/18