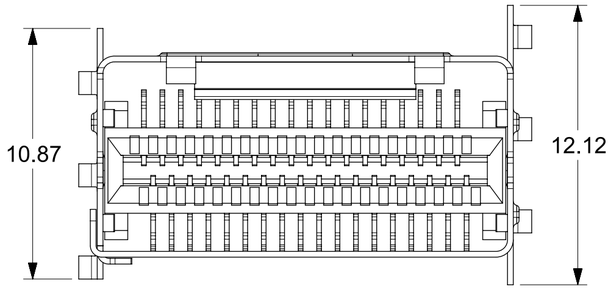

SMT

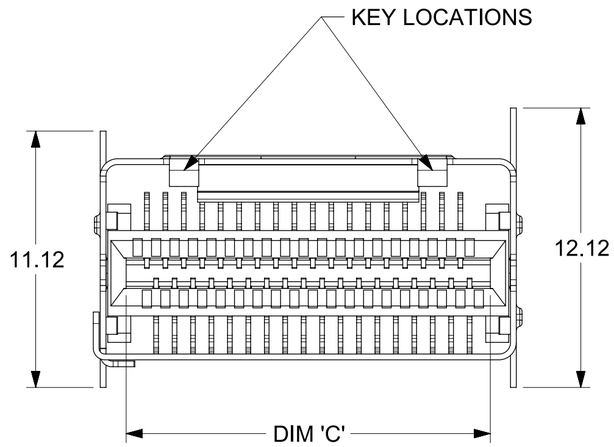

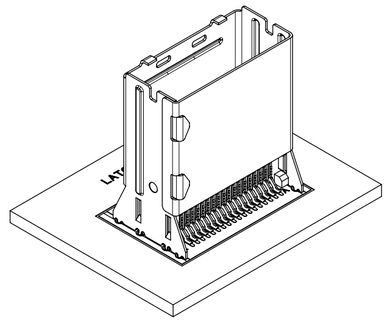

NOTES:
1. MATERIAL:
   CONNECTOR:
   HOUSING - HIGH TEMPERATURE THERMOPLASTIC GLASS FILLED, UL 94V-0, BLACK
   TERMINALS - COPPER ALLOY
   SHELL
   NICKEL SILVER, C770, THICKNESS: 0.250/0.254
2. FINISH:
   CONNECTOR
   OPTION 1
   CONTACT AREA - 0.38µm MIN GOLD OVER 2.54 µm NICKEL
   SOLDER FOOT AREA - 2.54-5.09µm TIN OVER 1.27 µm NICKEL
   OPTION 2
   CONTACT AREA - 0.76µm MIN GOLD OVER 2.54 µm NICKEL
   SOLDER FOOT AREA - 2.54-5.09µm TIN OVER 1.27 µm NICKEL
3. TERMINAL SOLDER FEET TO BE COPLANAR WITHIN 0.10 MEASURED FROM DATUM E
4. DATE CODE: 4 DIGIT (3 DIGIT DAY, 1 DIGIT YEAR) ON CONNECTOR ONLY
5. CIRCUIT IDENTIFIER: SEE APPROPRIATE INDUSTRY SPECIFICATION FOR LOCATION OF PIN 1
6. TO BE USED WITH THE FOLLOWING CABLE SERIES:
   79575/74563/79576/74573/79536/74562/74569/74586
7. PACKAGED PER PACKAGING SPECIFICATION: PK-75783-001
8. CONFORMS TO PRODUCT SPECIFICATION: PS-75783-001
9. PROCESS PER APPLICATION SPECIFICATION: AS-75783-001
10. THIS PART CONFORMS TO CLASS C REQUIREMENTS OF COSMETIC SPEC PS-45499-002

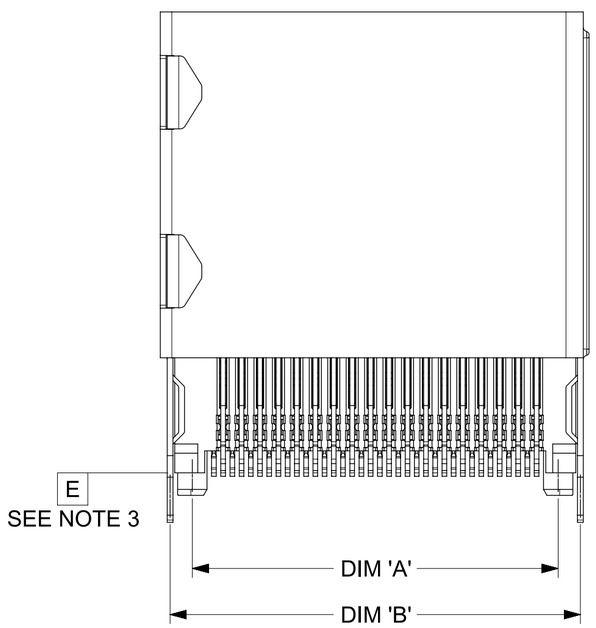

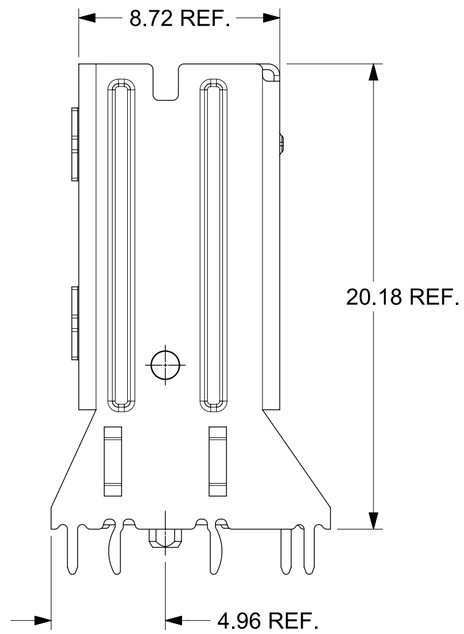

36 CIRCUIT
RETENTION FIT
SHELL OPTION SHOWN

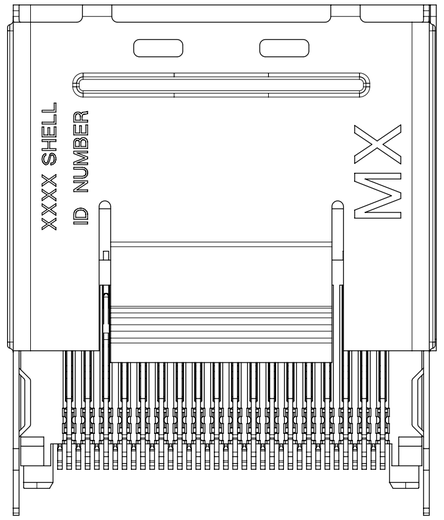

iPass™ IS A TRADEMARK OF MOLEX

CIRCUIT SIZE	DIM 'A'	DIM 'B'	DIM 'C'
36	16.00	17.80	15.80
50	21.60	23.40	21.40
68	28.80	30.60	28.60

THIS DRAWING CONTAINS INFORMATION THAT IS PROPRIETARY TO MOLEX ELECTRONIC TECHNOLOGIES, LLC AND SHOULD NOT BE USED WITHOUT WRITTEN PERMISSION

DIMENSION UNITS	SCALE
mm	5:1

GENERAL TOLERANCES (UNLESS SPECIFIED)

ANGULAR TOL	± 0.5°
4 PLACES	±
3 PLACES	±
2 PLACES	± 0.130
1 PLACE	± 0.25
0 PLACES	±

DRAFT WHERE APPLICABLE MUST REMAIN WITHIN DIMENSIONS

CURRENT REV DESC: REMOVED OBSOLETED PART NUMBERS 75784-0110, 75784-0112, 75784-0125, 75784-0147 & 75784-0148

STATUS: Production
DRWN: Vishal Ramesh Hosur 2024-05-08
CHK'D: Ganesh Rao B 2024-05-20
APPR: Gurunandan GA 2024-05-20

THIRD ANGLE PROJECTION | DRAWING: C-SIZE | SERIES: 75784

molex

I-PASS VERT CONNECTOR
INTERNAL ASSY W/SHELL 0.8MM PITCH I/O

PRODUCT SALES DRAWING

DOCUMENT NUMBER	DOC TYPE	DOC PART	REVISION
SD-75784-001	PSD	001	D9

MATERIAL NUMBER	CUSTOMER	SHEET NUMBER
SEE TABLE	GENERAL MARKET	1 OF 12

FORMAT: TC-B-prod-C
REVISION: B
DATE: 2022/08/01

ASSEMBLY WITH PRE-POSITIONING DEVICE

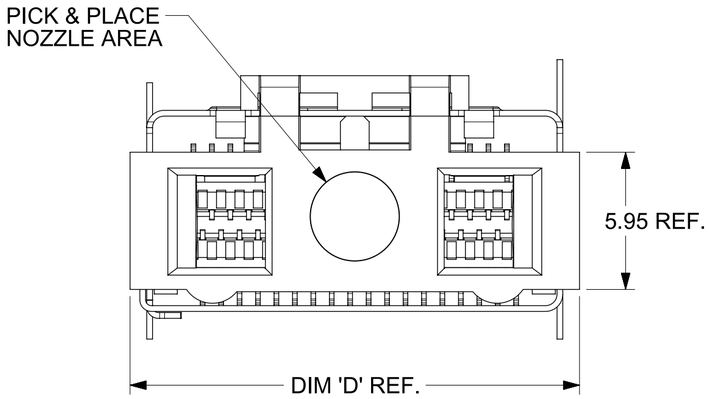

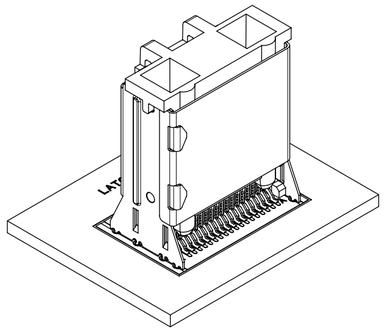

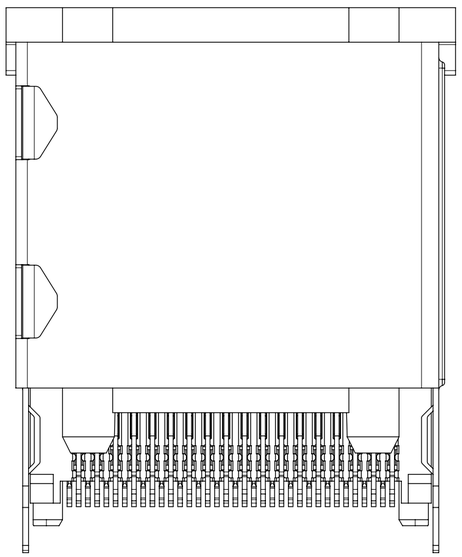

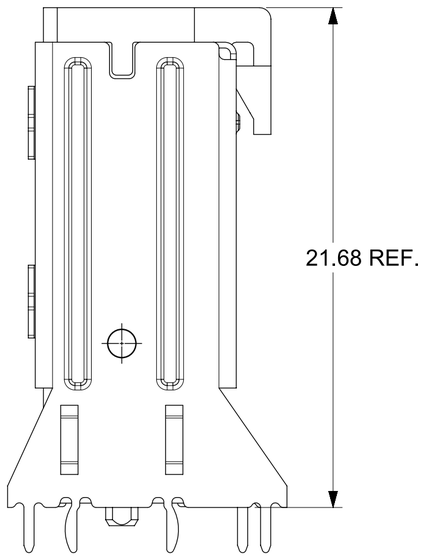

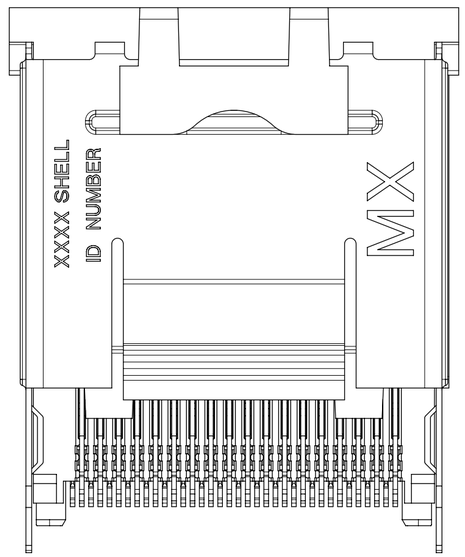

36 CIRCUIT RETENTION FIT SHOWN

NOTES:
1. PICK AND PLACE LOCATION DEFINED ON APPLICATION SPECIFICATION AS-75783-001
2. PACKAGING CONSISTS OF CONNECTOR AND SHELL WITH A PRE-POSITIONING PICK AND PLACE DEVICE THAT ARE PACKAGED IN "TAPE AND REEL" FOR ROBOTIC PICK AND PLACE.

CIRCUIT SIZE	DIM 'D'
36	19.50
50	25.10
68	32.30

iPass™ IS A TRADEMARK OF MOLEX

THIS DRAWING CONTAINS INFORMATION THAT IS PROPRIETARY TO MOLEX ELECTRONIC TECHNOLOGIES, LLC AND SHOULD NOT BE USED WITHOUT WRITTEN PERMISSION

DIMENSION UNITS	SCALE
mm	5:1

GENERAL TOLERANCES (UNLESS SPECIFIED)

ANGULAR TOL	± 0.5°
4 PLACES	±
3 PLACES	±
2 PLACES	± 0.130
1 PLACE	± 0.25
0 PLACES	±

DRAFT WHERE APPLICABLE MUST REMAIN WITHIN DIMENSIONS

CURRENT REV DESC: REMOVED OBSOLETED PART NUMBERS 75784-0110, 75784-0112, 75784-0125, 75784-0147 & 75784-0148

STATUS: Production
DRWN: Vishal Ramesh Hosur 2024-05-08
CHK'D: Ganesh Rao B 2024-05-20
APPR: Gurunandan GA 2024-05-20

THIRD ANGLE PROJECTION | DRAWING: C-SIZE | SERIES: 75784

molex

I-PASS VERT CONNECTOR
INTERNAL ASSY W/SHELL 0.8MM PITCH I/O

PRODUCT SALES DRAWING

DOCUMENT NUMBER	DOC TYPE	DOC PART	REVISION
SD-75784-001	PSD	001	D9

MATERIAL NUMBER	CUSTOMER	SHEET NUMBER
SEE TABLE	GENERAL MARKET	2 OF 12

FORMAT: TC-4b-prod-C
REVISION: B
DATE: 2022/08/01

SHELL PCB INTERFACE

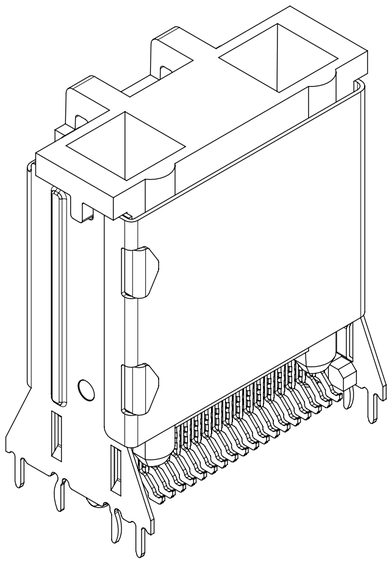

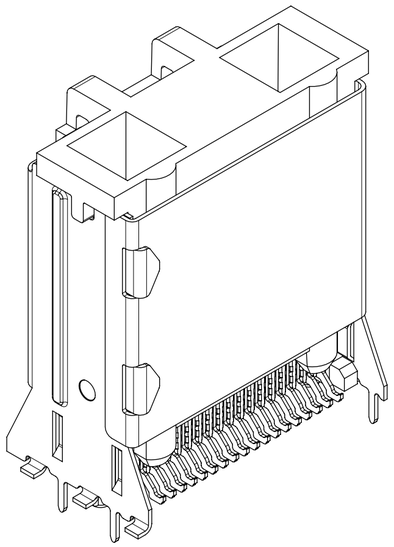

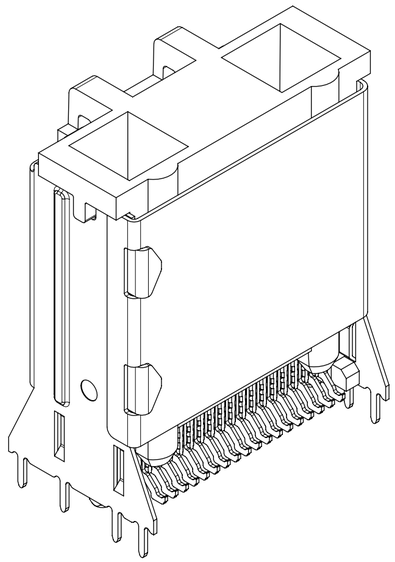

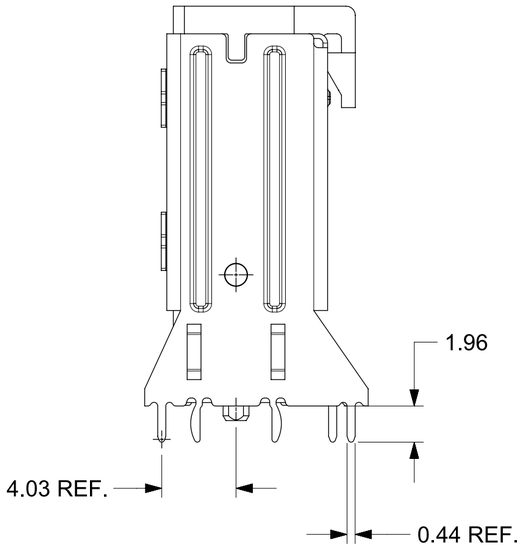

RETENTION-FIT
SHELL OPTION

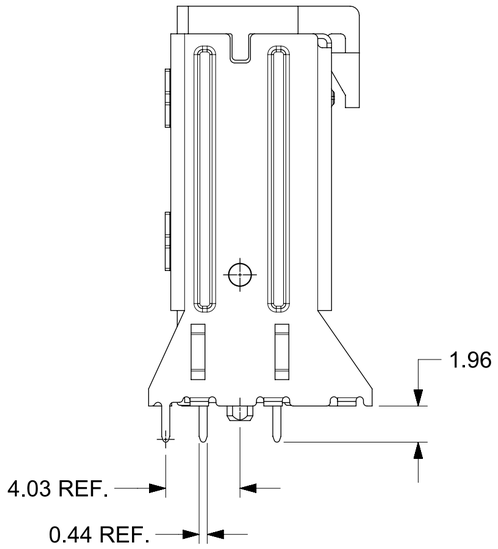

SMT SHELL OPTION

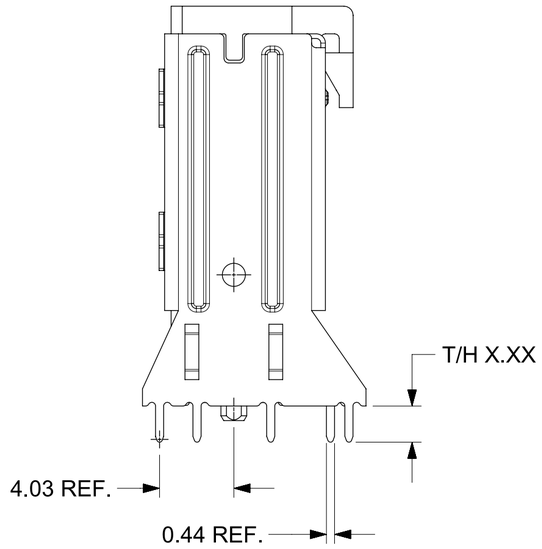

THRU-HOLE SHELL OPTION
SEE TABLE FOR LENGTH
(X.XX DENOTES LENGTH)

RECOMMENDED PCB THICKNESS
FOR SPECIFIED TAIL LENGTH

TAIL LENGTH	PCB THICKNESS
1.96	1.57 (.062)
2.79	2.36 (.093)
3.18	2.79 (.110)
3.56	3.18 (.125)

NOTE:
RETENTION FIT DENOTES TAILS THAT OFFER RETENTION
TO PCB DURING REFLOW PROCESS
SMT DENOTES SURFACE MOUNT TERMINATION
T/H X.XX DENOTES THRU-HOLE TAIL OF LENGTH X.XX

iPass™ IS A TRADEMARK OF MOLEX

THIS DRAWING CONTAINS INFORMATION THAT IS PROPRIETARY TO MOLEX ELECTRONIC TECHNOLOGIES, LLC AND SHOULD NOT BE USED WITHOUT WRITTEN PERMISSION

DIMENSION UNITS	SCALE
mm	4:1

GENERAL TOLERANCES (UNLESS SPECIFIED)

ANGULAR TOL	± 0.5°
4 PLACES	±
3 PLACES	±
2 PLACES	± 0.130
1 PLACE	± 0.25
0 PLACES	±

DRAFT WHERE APPLICABLE MUST REMAIN WITHIN DIMENSIONS

CURRENT REV DESC: REMOVED OBSOLETED PART NUMBERS 75784-0110, 75784-0112, 75784-0125, 75784-0147 & 75784-0148

STATUS: Production
DRWN: Vishal Ramesh Hosur 2024-05-08
CHK'D: Ganesh Rao B 2024-05-20
APPR: Gurunandan GA 2024-05-20

THIRD ANGLE PROJECTION | DRAWING: C-SIZE | SERIES: 75784

molex

I-PASS VERT CONNECTOR
INTERNAL ASSY W/SHELL 0.8MM PITCH I/O

PRODUCT SALES DRAWING

DOCUMENT NUMBER	DOC TYPE	DOC PART	REVISION
SD-75784-001	PSD	001	D9

MATERIAL NUMBER	CUSTOMER	SHEET NUMBER
SEE TABLE	GENERAL MARKET	3 OF 12

KEYING OPTIONS

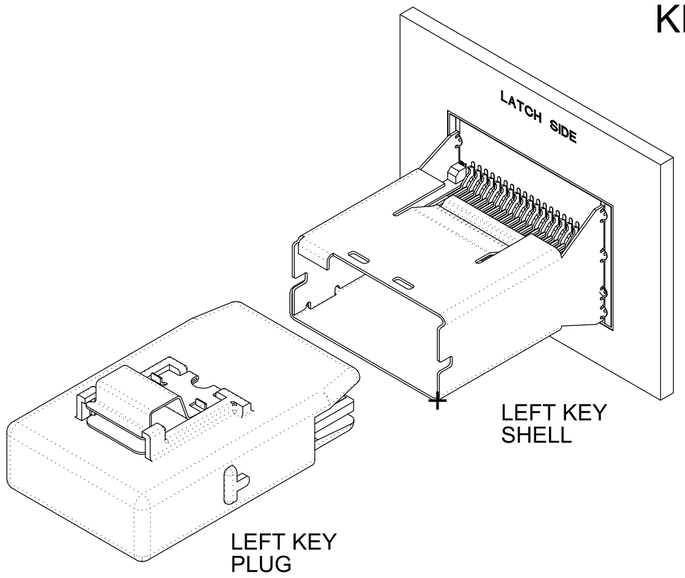

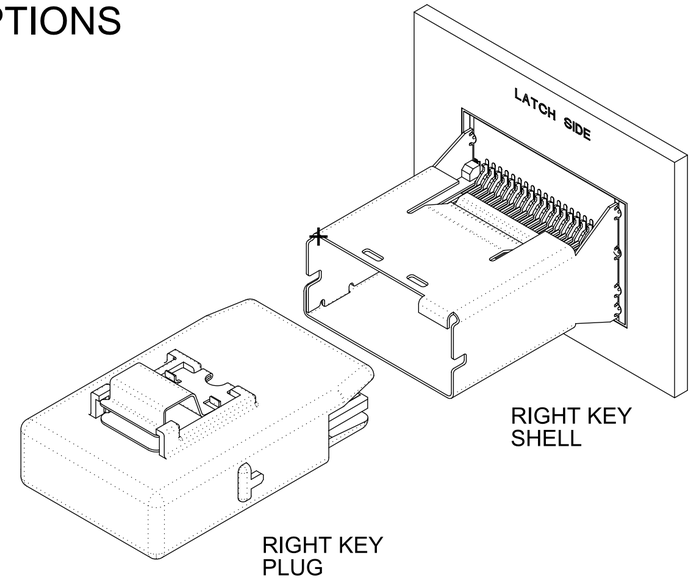

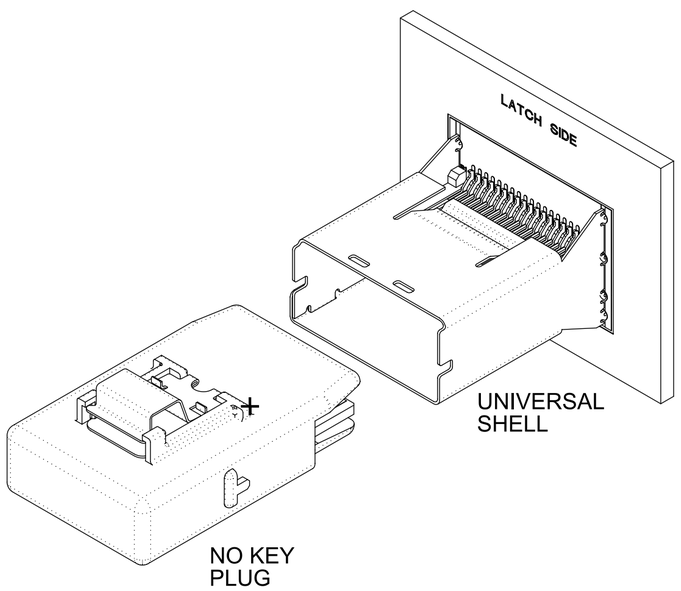

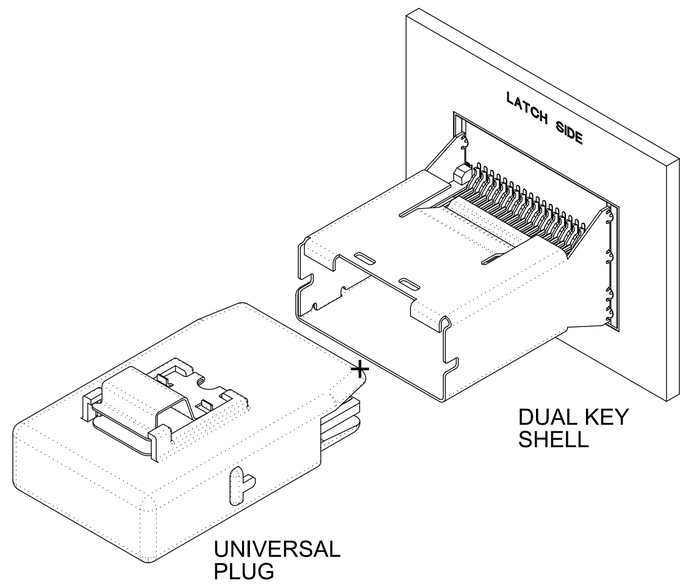

	UNIVERSAL SHELL	LEFT KEY SHELL	RIGHT KEY SHELL	DUAL KEY SHELL
NO KEY PLUG	YES	NO	NO	NO
LEFT KEY PLUG	YES	YES	NO	NO
RIGHT KEY PLUG	YES	NO	YES	NO
UNIVERSAL PLUG	YES	YES	YES	YES

iPass™ IS A TRADEMARK OF MOLEX

THIS DRAWING CONTAINS INFORMATION THAT IS PROPRIETARY TO MOLEX ELECTRONIC TECHNOLOGIES, LLC AND SHOULD NOT BE USED WITHOUT WRITTEN PERMISSION

DIMENSION UNITS	SCALE
mm	2:1

GENERAL TOLERANCES (UNLESS SPECIFIED)

ANGULAR TOL	± 0.5°
4 PLACES	±
3 PLACES	±
2 PLACES	± 0.130
1 PLACE	± 0.25
0 PLACES	±

DRAFT WHERE APPLICABLE MUST REMAIN WITHIN DIMENSIONS

CURRENT REV DESC: REMOVED OBSOLETED PART NUMBERS 75784-0110, 75784-0112, 75784-0125, 75784-0147 & 75784-0148

STATUS: Production
DRWN: Vishal Ramesh Hosur 2024-05-08
CHK'D: Ganesh Rao B 2024-05-20
APPR: Gurunandan GA 2024-05-20

THIRD ANGLE PROJECTION

molex

I-PASS VERT CONNECTOR
INTERNAL ASSY W/SHELL 0.8MM PITCH I/O

PRODUCT SALES DRAWING

DOCUMENT NUMBER	DOC TYPE	DOC PART	REVISION
SD-75784-001	PSD	001	D9

DRAWING	SERIES	MATERIAL NUMBER	CUSTOMER	SHEET NUMBER
C-SIZE	75784	SEE TABLE	GENERAL MARKET	4 OF 12

FORMAT: TC-b-prod-C
REVISION: B
DATE: 2022/08/01

36 CIRCUIT ITEM NUMBERS

CIRCUIT SIZE	ITEM NUMBER	PLATING OPTION	SHELL PCB OPTION	SHELL KEY OPTION
36	75784-0109	OPTION 1	RETENTION	DUAL
36	75784-0111	OPTION 1	SMT	RIGHT
36	75784-0119	OPTION 2	RETENTION	LEFT
36	75784-0120	OPTION 2	RETENTION	RIGHT
36	75784-0126	OPTION 1	SMT	UNIVERSAL
36	75784-0131	OPTION 1	T/H 1.96	DUAL
36	75784-0132	OPTION 1	T/H 1.96	UNIVERSAL
36	75784-0136	OPTION 2	T/H 1.69	UNIVERSAL

CIRCUIT SIZE	ITEM NUMBER	PLATING OPTION	SHELL PCB OPTION	SHELL KEY OPTION
36	75784-0137	OPTION 1	T/H 2.79	LEFT
36	75784-0138	OPTION 1	T/H 2.79	RIGHT
36	75784-0139	OPTION 1	T/H 2.79	DUAL
36	75784-0140	OPTION 1	T/H 2.79	UNIVERSAL
36	75784-0143	OPTION 2	T/H 2.79	DUAL
36	75784-0144	OPTION 2	T/H 2.79	UNIVERSAL
36	75784-0152	OPTION 2	T/H 3.18	UNIVERSAL
36	75784-0156	OPTION 1	T/H 3.56	UNIVERSAL
36	75784-0159	OPTION 2	T/H 3.56	DUAL
36	75784-0160	OPTION 2	T/H 3.56	UNIVERSAL

iPass™ IS A TRADEMARK OF MOLEX

THIS DRAWING CONTAINS INFORMATION THAT IS PROPRIETARY TO MOLEX ELECTRONIC TECHNOLOGIES, LLC AND SHOULD NOT BE USED WITHOUT WRITTEN PERMISSION

DIMENSION UNITS	SCALE
mm	1:1

GENERAL TOLERANCES (UNLESS SPECIFIED)

ANGULAR TOL	± 0.5°
4 PLACES	±
3 PLACES	±
2 PLACES	± 0.130
1 PLACE	± 0.25
0 PLACES	±

DRAFT WHERE APPLICABLE MUST REMAIN WITHIN DIMENSIONS

CURRENT REV DESC: REMOVED OBSOLETED PART NUMBERS 75784-0110, 75784-0112, 75784-0125, 75784-0147 & 75784-0148

STATUS: Production

DRWN:	Vishal Ramesh Hosur	2024-05-08
CHK'D:	Ganesh Rao B	2024-05-20
APPR:	Gurunandan GA	2024-05-20

THIRD ANGLE PROJECTION | DRAWING: C-SIZE | SERIES: 75784

molex

I-PASS VERT CONNECTOR
INTERNAL ASSY W/SHELL 0.8MM PITCH I/O

PRODUCT SALES DRAWING

DOCUMENT NUMBER	DOC TYPE	DOC PART	REVISION
SD-75784-001	PSD	001	D9

MATERIAL NUMBER	CUSTOMER	SHEET NUMBER
SEE TABLE	GENERAL MARKET	5 OF 12

50 CIRCUIT ITEM NUMBERS

CIRCUIT SIZE	ITEM NUMBER	PLATING OPTION	SHELL PCB OPTION	SHELL KEY OPTION
50	75784-0244	OPTION 2	T/H 2.79	UNIVERSAL

iPass™ IS A TRADEMARK OF MOLEX

THIS DRAWING CONTAINS INFORMATION THAT IS PROPRIETARY TO MOLEX ELECTRONIC TECHNOLOGIES, LLC AND SHOULD NOT BE USED WITHOUT WRITTEN PERMISSION

DIMENSION UNITS	SCALE
mm	1:1

GENERAL TOLERANCES (UNLESS SPECIFIED)

ANGULAR TOL	± 0.5°
4 PLACES	±
3 PLACES	±
2 PLACES	± 0.130
1 PLACE	± 0.25
0 PLACES	±

DRAFT WHERE APPLICABLE MUST REMAIN WITHIN DIMENSIONS

CURRENT REV DESC: REMOVED OBSOLETED PART NUMBERS 75784-0110, 75784-0112, 75784-0125, 75784-0147 & 75784-0148

STATUS: Production

DRWN:	Vishal Ramesh Hosur	2024-05-08
CHK'D:	Ganesh Rao B	2024-05-20
APPR:	Gurunandan GA	2024-05-20

THIRD ANGLE PROJECTION

DRAWING: C-SIZE

SERIES: 75784

molex

I-PASS VERT CONNECTOR
INTERNAL ASSY W/SHELL 0.8MM PITCH I/O

PRODUCT SALES DRAWING

DOCUMENT NUMBER	DOC TYPE	DOC PART	REVISION
SD-75784-001	PSD	001	D9

MATERIAL NUMBER	CUSTOMER	SHEET NUMBER
SEE TABLE	GENERAL MARKET	6 OF 12

68 CIRCUIT ITEM NUMBERS

CIRCUIT SIZE	ITEM NUMBER	PLATING OPTION	SHELL PCB OPTION	SHELL KEY OPTION
68	75784-0332	OPTION 1	T/H 1.96	UNIVERSAL

CIRCUIT SIZE	ITEM NUMBER	PLATING OPTION	SHELL PCB OPTION	SHELL KEY OPTION
68	75784-0338	OPTION 1	T/H 2.79	RIGHT
68	75784-0340	OPTION 1	T/H 2.79	UNIVERSAL
68	75784-0348	OPTION 1	T/H 3.18	UNIVERSAL

iPass™ IS A TRADEMARK OF MOLEX

THIS DRAWING CONTAINS INFORMATION THAT IS PROPRIETARY TO MOLEX ELECTRONIC TECHNOLOGIES, LLC AND SHOULD NOT BE USED WITHOUT WRITTEN PERMISSION

DIMENSION UNITS	SCALE
mm	1:1

GENERAL TOLERANCES (UNLESS SPECIFIED)

ANGULAR TOL	± 0.5°
4 PLACES	±
3 PLACES	±
2 PLACES	± 0.130
1 PLACE	± 0.25
0 PLACES	±

DRAFT WHERE APPLICABLE MUST REMAIN WITHIN DIMENSIONS

CURRENT REV DESC: REMOVED OBSOLETED PART NUMBERS 75784-0110, 75784-0112, 75784-0125, 75784-0147 & 75784-0148

STATUS: Production

DRWN:	Vishal Ramesh Hosur	2024-05-08
CHK'D:	Ganesh Rao B	2024-05-20
APPR:	Gurunandan GA	2024-05-20

THIRD ANGLE PROJECTION | DRAWING: C-SIZE | SERIES: 75784

molex

I-PASS VERT CONNECTOR
INTERNAL ASSY W/SHELL 0.8MM PITCH I/O

PRODUCT SALES DRAWING

DOCUMENT NUMBER	DOC TYPE	DOC PART	REVISION
SD-75784-001	PSD	001	D9

MATERIAL NUMBER	CUSTOMER	SHEET NUMBER
SEE TABLE	GENERAL MARKET	7 OF 12

VERTICAL CONNECTOR
WITH RETENTION FIT & THRU-HOLE SHELL
PCB FOOT PRINT

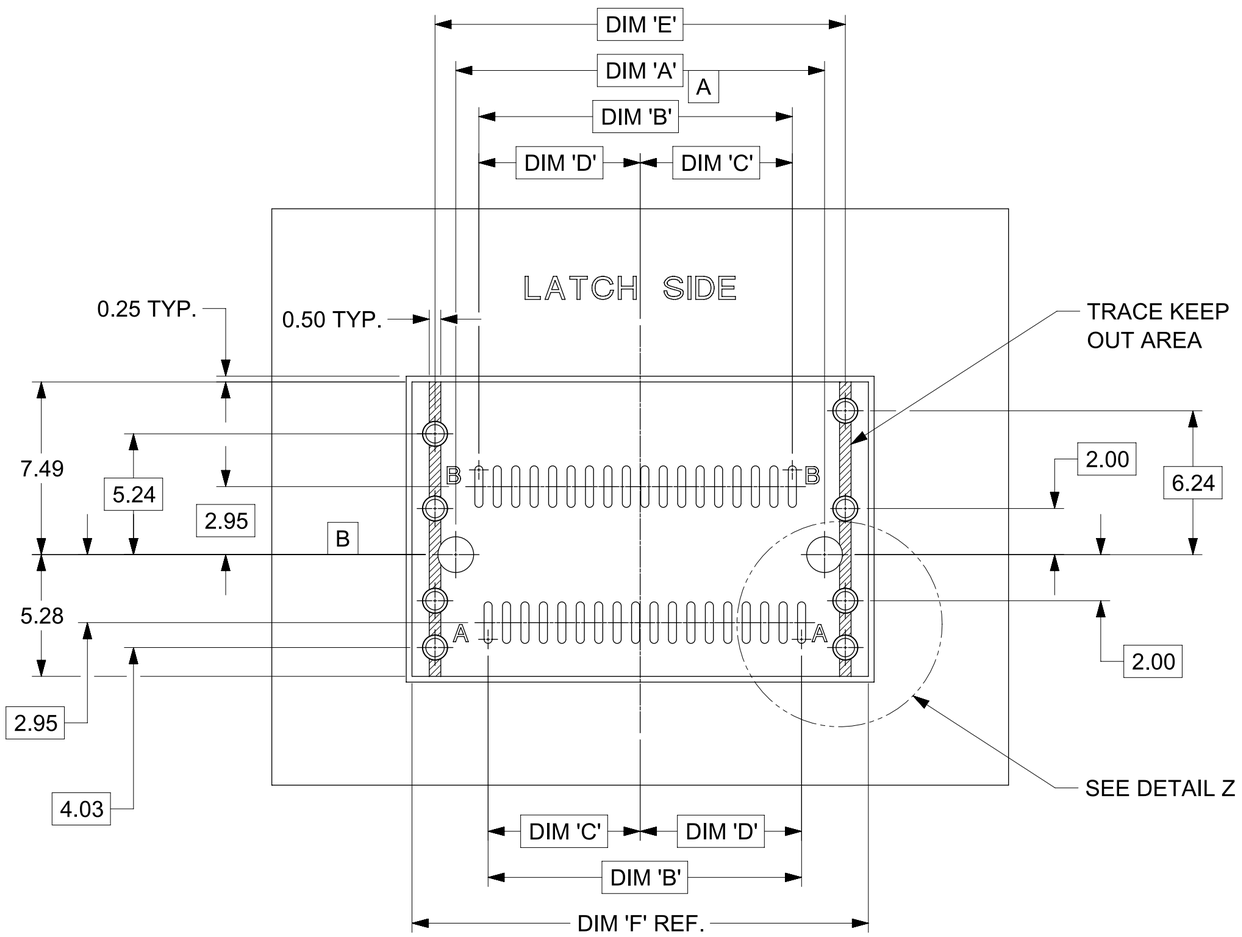

36 CIRCUIT SHOWN

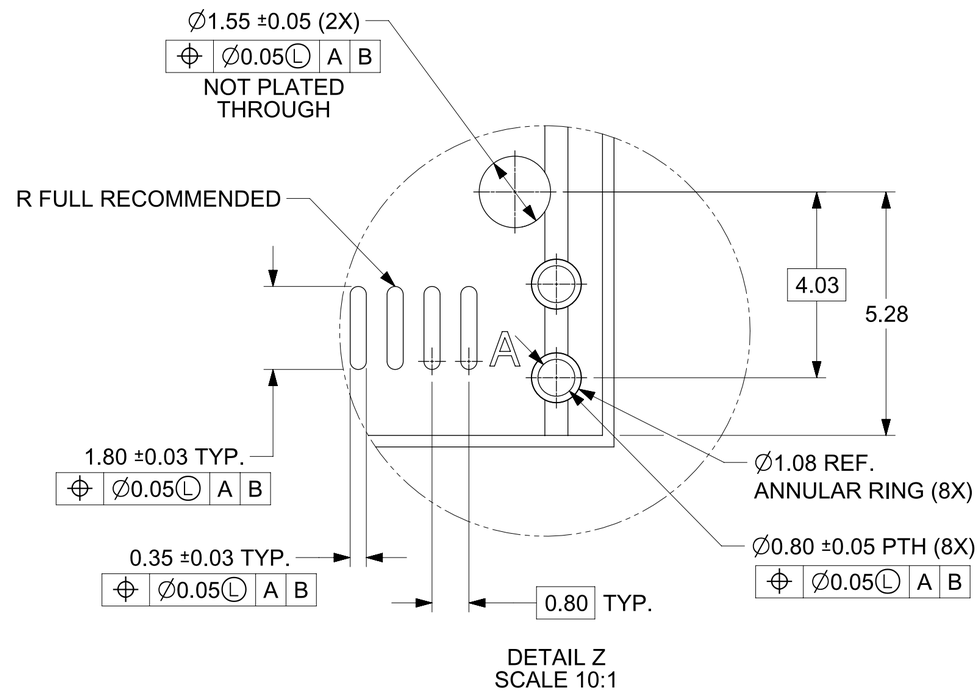

DETAIL Z
SCALE 10:1

CIRCUIT SIZE	PEG TO PEG DIM 'A'	FIRST TO LAST PAD DIM 'B'	CENTERLINE TO PAD DIM 'C'	CENTERLINE TO PAD DIM 'D'	SHELL PEG TO PEG DIM 'E'	SHELL FOOTPRINT WIDTH DIM 'F'
36	16.00	13.60	6.60	7.00	17.80	19.80
50	21.60	19.20	9.40	9.80	23.40	25.40
68	28.80	26.40	13.00	13.40	30.60	32.60

iPass™ IS A TRADEMARK OF MOLEX

THIS DRAWING CONTAINS INFORMATION THAT IS PROPRIETARY TO MOLEX ELECTRONIC TECHNOLOGIES, LLC AND SHOULD NOT BE USED WITHOUT WRITTEN PERMISSION

DIMENSION UNITS	SCALE
mm	5:1

GENERAL TOLERANCES (UNLESS SPECIFIED)

ANGULAR TOL	± 0.5°
4 PLACES	±
3 PLACES	±
2 PLACES	± 0.130
1 PLACE	± 0.25
0 PLACES	±

DRAFT WHERE APPLICABLE MUST REMAIN WITHIN DIMENSIONS

CURRENT REV DESC: REMOVED OBSOLETED PART NUMBERS 75784-0110, 75784-0112, 75784-0125, 75784-0147 & 75784-0148

STATUS: Production
DRWN: Vishal Ramesh Hosur 2024-05-08
CHK'D: Ganesh Rao B 2024-05-20
APPR: Gurunandan GA 2024-05-20

molex

I-PASS VERT CONNECTOR
INTERNAL ASSY W/SHELL 0.8MM PITCH I/O

PRODUCT SALES DRAWING

DOCUMENT NUMBER	DOC TYPE	DOC PART	REVISION
SD-75784-001	PSD	001	D9

THIRD ANGLE PROJECTION	DRAWING	SERIES	MATERIAL NUMBER	CUSTOMER	SHEET NUMBER
	C-SIZE	75784	SEE TABLE	GENERAL MARKET	8 OF 12

FORMAT: TC-B-prod-C
REVISION: B
DATE: 2022/08/01

VERTICAL CONNECTOR WITH SMT SHELL PCB FOOT PRINT

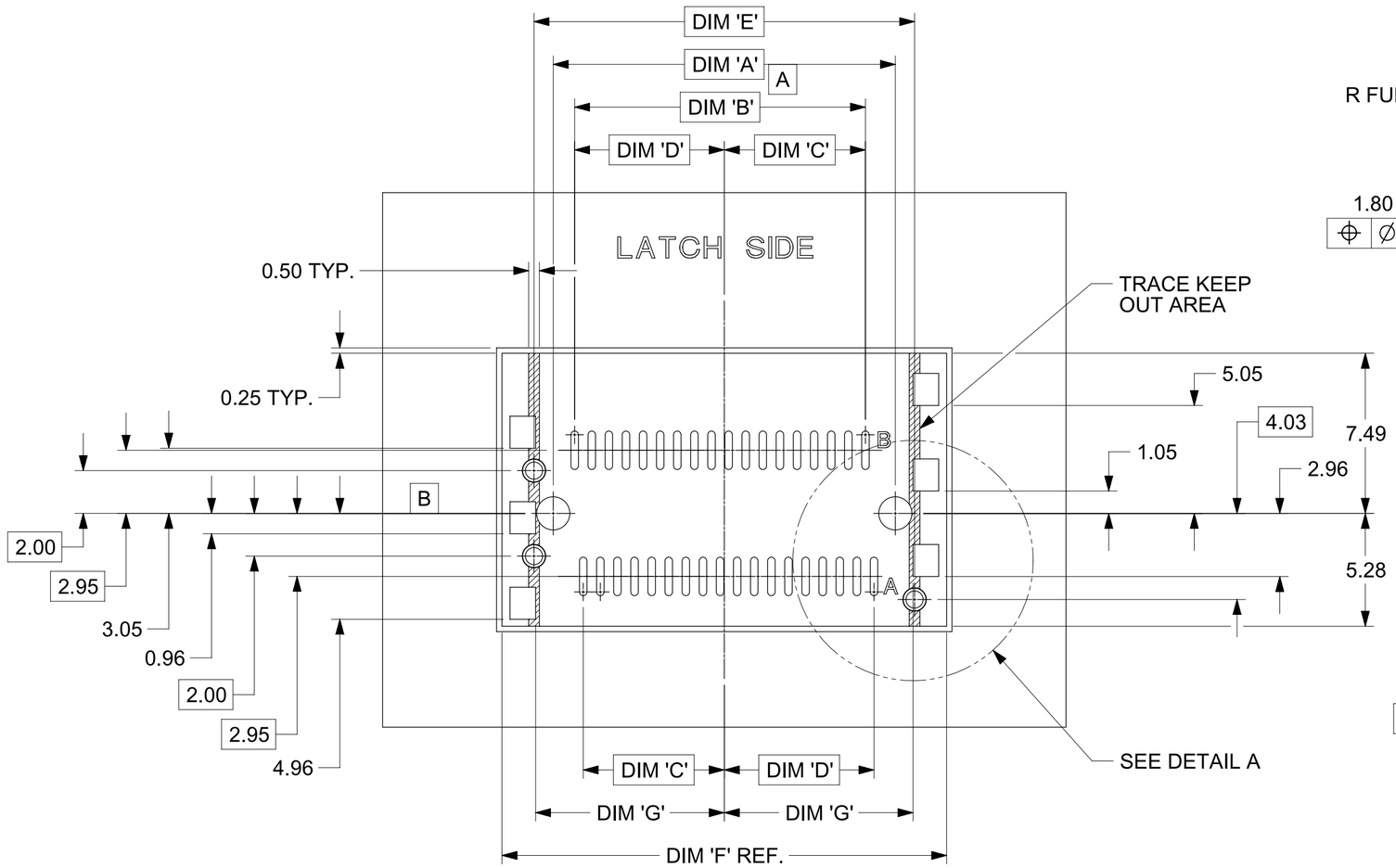

36 CIRCUIT SHOWN

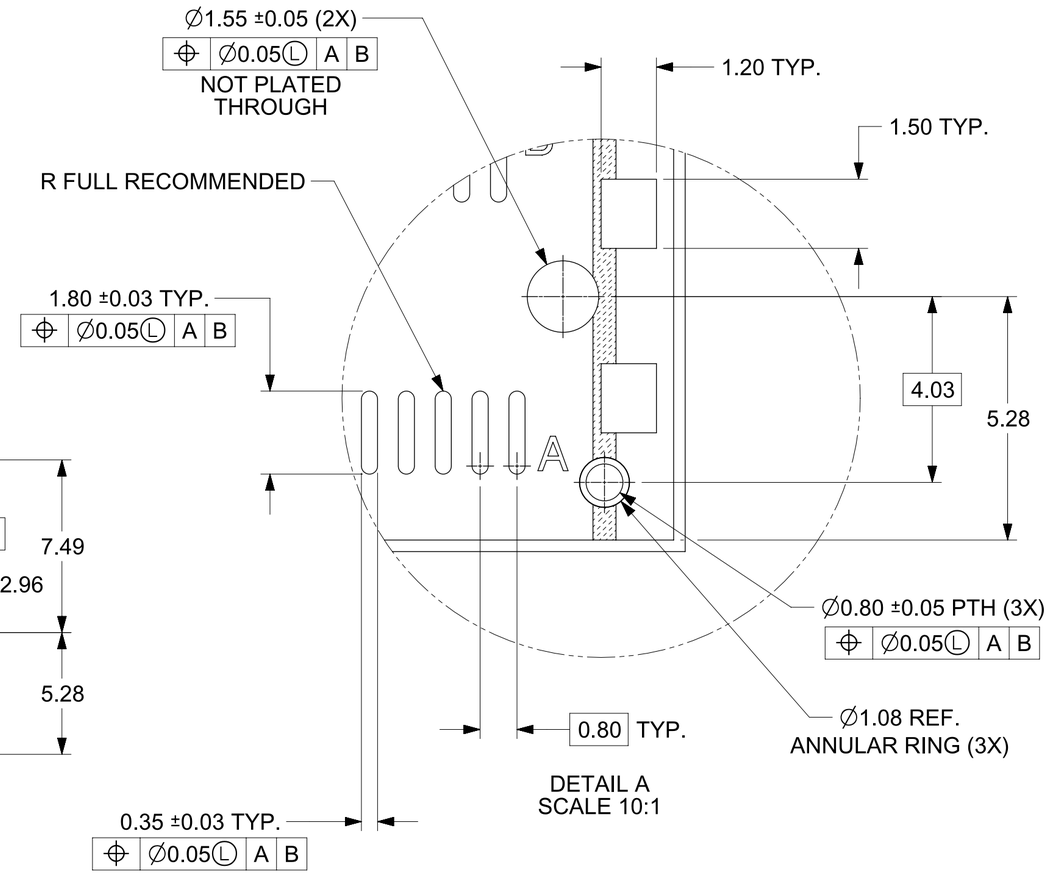

CIRCUIT SIZE	PEG TO PEG DIM 'A'	FIRST TO LAST PAD DIM 'B'	CENTERLINE TO PAD DIM 'C'	CENTERLINE TO PAD DIM 'D'	SHELL PEG TO PEG DIM 'E'	SHELL FOOTPRINT WIDTH DIM 'F'	CENTERLINE TO PAD EDGE DIM 'G'
36	16.00	13.60	6.60	7.00	17.80	20.80	8.825
50	21.60	19.20	9.40	9.80	23.40	26.40	11.625
68	28.80	26.40	13.00	13.40	30.60	33.60	15.225

iPass™ IS A TRADEMARK OF MOLEX

THIS DRAWING CONTAINS INFORMATION THAT IS PROPRIETARY TO MOLEX ELECTRONIC TECHNOLOGIES, LLC AND SHOULD NOT BE USED WITHOUT WRITTEN PERMISSION

DIMENSION UNITS: mm	SCALE: 5:1	CURRENT REV DESC: REMOVED OBSOLETED PART NUMBERS 75784-0110, 75784-0112, 75784-0125, 75784-0147 & 75784-0148	molex
GENERAL TOLERANCES (UNLESS SPECIFIED)			I-PASS VERT CONNECTOR INTERNAL ASSY W/SHELL 0.8MM PITCH I/O
ANGULAR TOL	± 0.5°		
4 PLACES	±		PRODUCT SALES DRAWING
3 PLACES	±		
2 PLACES	± 0.130	STATUS: Production	DOCUMENT NUMBER: SD-75784-001 · DOC TYPE: PSD · DOC PART: 001 · REVISION: D9
1 PLACE	± 0.25	DRWN: Vishal Ramesh Hosur 2024-05-08	
0 PLACES	±	CHK'D: Ganesh Rao B 2024-05-20	
		APPR: Gurunandan GA 2024-05-20	
DRAFT WHERE APPLICABLE MUST REMAIN WITHIN DIMENSIONS	THIRD ANGLE PROJECTION	DRAWING: C-SIZE · SERIES: 75784	MATERIAL NUMBER: SEE TABLE · CUSTOMER: GENERAL MARKET · SHEET NUMBER: 9 OF 12

FORMAT: TC-6-proto-C
REVISION: B
DATE: 2022/08/01

VERTICAL CONNECTOR WITH SHELL
PCB FOOT PRINT DESCRIPTIONS

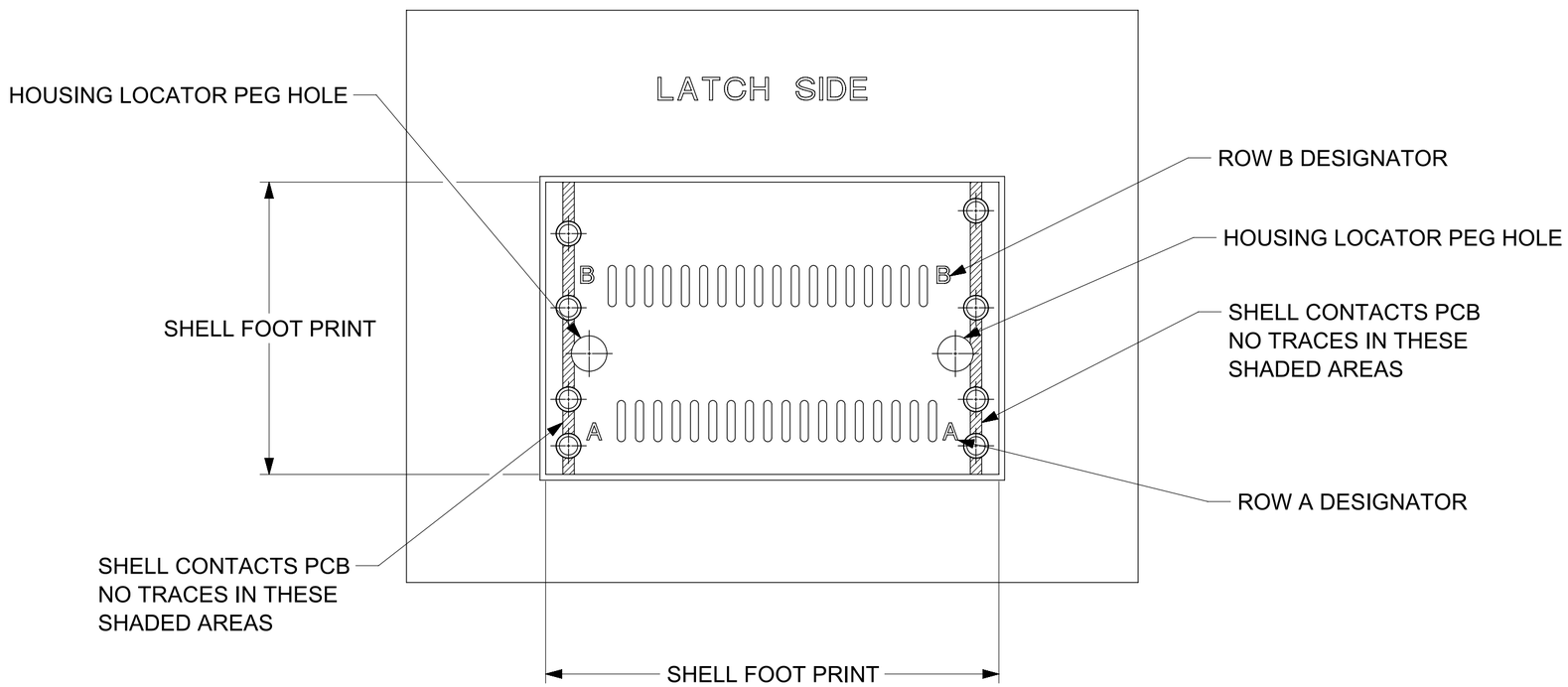

36 CIRCUIT SHOWN

iPass™ IS A TRADEMARK OF MOLEX

THIS DRAWING CONTAINS INFORMATION THAT IS PROPRIETARY TO MOLEX ELECTRONIC TECHNOLOGIES, LLC AND SHOULD NOT BE USED WITHOUT WRITTEN PERMISSION

DIMENSION UNITS	SCALE
mm	5:1

GENERAL TOLERANCES (UNLESS SPECIFIED)

ANGULAR TOL	± 0.5°
4 PLACES	±
3 PLACES	±
2 PLACES	± 0.130
1 PLACE	± 0.25
0 PLACES	±

DRAFT WHERE APPLICABLE MUST REMAIN WITHIN DIMENSIONS

CURRENT REV DESC: REMOVED OBSOLETED PART NUMBERS 75784-0110, 75784-0112, 75784-0125, 75784-0147 & 75784-0148

STATUS: Production

DRWN:	Vishal Ramesh Hosur	2024-05-08
CHK'D:	Ganesh Rao B	2024-05-20
APPR:	Gurunandan GA	2024-05-20

THIRD ANGLE PROJECTION | DRAWING: C-SIZE | SERIES: 75784

molex

I-PASS VERT CONNECTOR
INTERNAL ASSY W/SHELL 0.8MM PITCH I/O

PRODUCT SALES DRAWING

DOCUMENT NUMBER	DOC TYPE	DOC PART	REVISION
SD-75784-001	PSD	001	D9

MATERIAL NUMBER	CUSTOMER	SHEET NUMBER
SEE TABLE	GENERAL MARKET	10 OF 12

FORMAT: TC-tb-prod-C
REVISION: B
DATE: 2022/08/01

MATING INTERFACE (FOR REFERENCE ONLY)

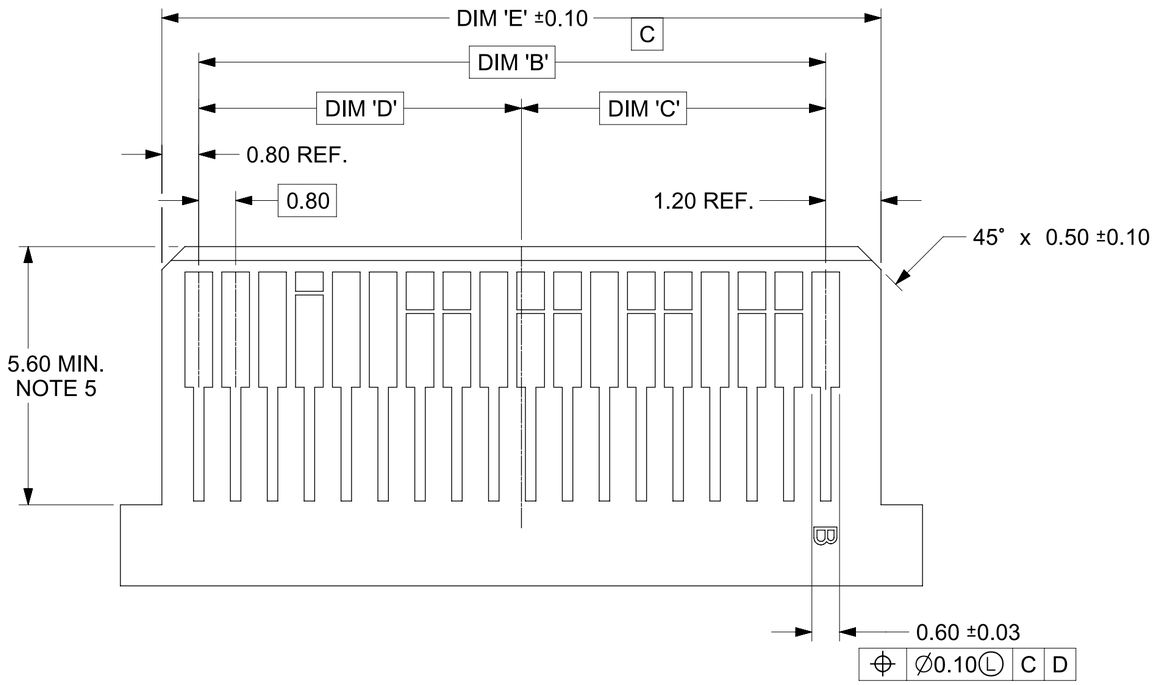

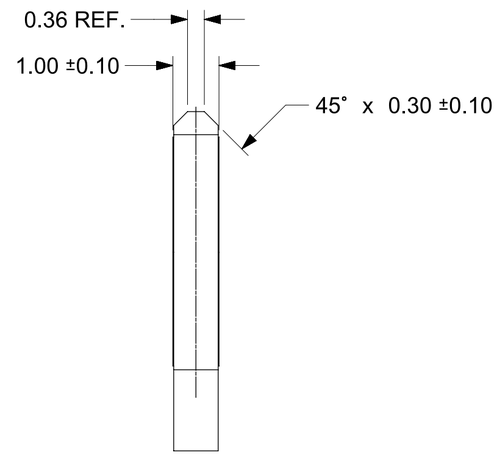

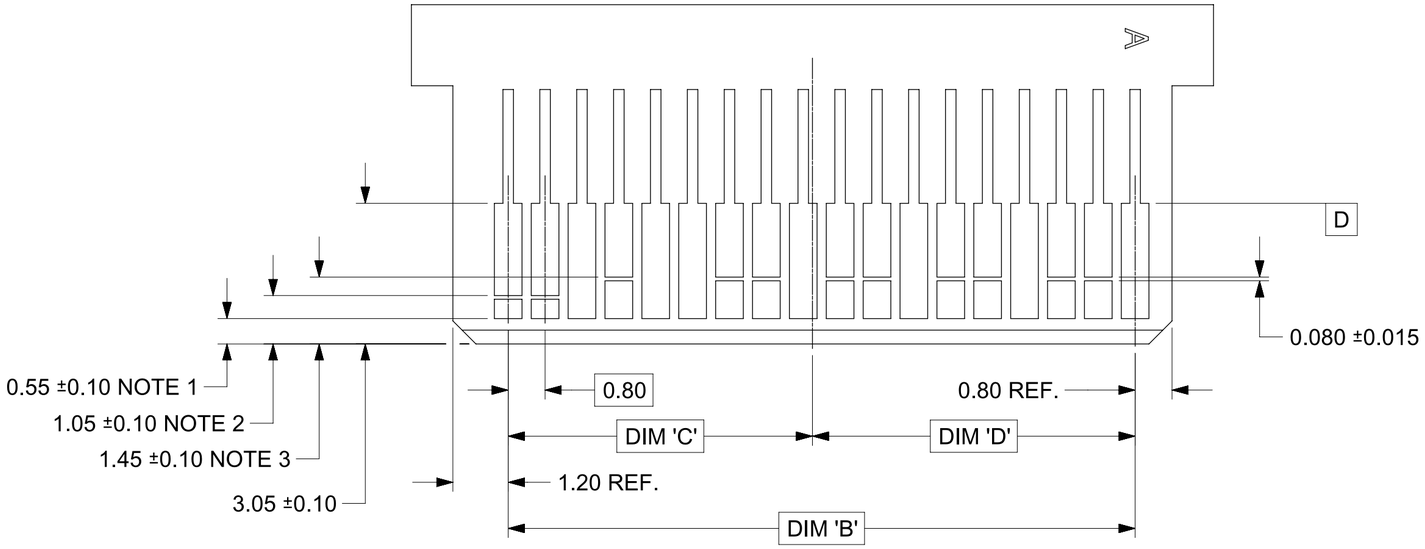

36 CIRCUIT SHOWN

NOTES:
1. PAD CONFIGURATION FOR FIRST MATE.
2. PAD CONFIGURATION FOR SECOND MATE.
3. PAD CONFIGURATION FOR THIRD MATE. (HIGH SPEED SIGNALS)
4. FOR PIN ASSIGNMENTS AND MATING SEQUENCE (1ST, 2ND, 3RD), SEE APPLICABLE SPECIFICATION.
5. MINIMUM STEP REQUIRED IF PCB MADE WIDER THAN TONGUE.

CIRCUIT SIZE	TERM/SIDE 'N'	DIM 'B'	DIM 'C'	DIM 'D'	DIM 'E'
36	18	13.60	6.60	7.00	15.60
50	25	19.20	9.40	9.80	21.20
68	34	26.40	13.00	13.40	28.40

iPass™ IS A TRADEMARK OF MOLEX

THIS DRAWING CONTAINS INFORMATION THAT IS PROPRIETARY TO MOLEX ELECTRONIC TECHNOLOGIES, LLC AND SHOULD NOT BE USED WITHOUT WRITTEN PERMISSION

DIMENSION UNITS	SCALE
mm	1:1

GENERAL TOLERANCES (UNLESS SPECIFIED)

ANGULAR TOL	± 0.5˚
4 PLACES	±
3 PLACES	±
2 PLACES	± 0.130
1 PLACE	± 0.25
0 PLACES	±

DRAFT WHERE APPLICABLE MUST REMAIN WITHIN DIMENSIONS

CURRENT REV DESC: REMOVED OBSOLETED PART NUMBERS 75784-0110, 75784-0112, 75784-0125, 75784-0147 & 75784-0148

STATUS: Production
DRWN: Vishal Ramesh Hosur 2024-05-08
CHK'D: Ganesh Rao B 2024-05-20
APPR: Gurunandan GA 2024-05-20

molex

I-PASS VERT CONNECTOR
INTERNAL ASSY W/SHELL 0.8MM PITCH I/O

PRODUCT SALES DRAWING

DOCUMENT NUMBER	DOC TYPE	DOC PART	REVISION
SD-75784-001	PSD	001	D9

THIRD ANGLE PROJECTION	DRAWING	SERIES	MATERIAL NUMBER	CUSTOMER	SHEET NUMBER
	C-SIZE	75784	SEE TABLE	GENERAL MARKET	11 OF 12

FORMAT: TC-B-proa-C
REVISION: B
DATE: 2022/08/01

REVISION DESCRIPTION

REV	DATE	DESCRIPTION
D5	2019/4/17	DRAWING MIGRATION TO ECTR
D6	2021/08/03	OBSOLETED PART NUMBERS: 757840008,757840019,757840020,757840021,757840022,757840023,757840024,757840029,757840030,757840031,757840033, 757840034,757840035,757840107,757840108,757840130,757840135,757840145,757840146,757840149,757840153,757840154, 757840155,757840157,757840158,757840207,757840209,757840210,757840211,757840219,757840220,757840221,757840222, 757840223,757840224,757840227,757840228,757840229,757840230,757840231,757840233,757840234,757840235,757840236, 757840237,757840238,757840239,757840241,757840242,757840243,757840246,757840247,757840248,757840249,757840250, 757840251,757840309,757840310,757840311,757840312,757840319,757840321,757840322,757840323,757840325,757840331, 757840335,757840339,757840341,757840342,757840343,757840345,757840346,757840347,757840349,757840350
D7	2023/03/29	1)OBSOLETED PART NUMBERS 757840050, 757840252, 757840051, 757840052, 757840012, 757840336, 757840337, 757840141, 757840142, 757840025, 757840344, 757840028, 757840026, 757840032, 757840150, 757840151, 757840352, 757840232, 757840039, 757840037, 757840038, 757840042, 757840240, 757840043, 757840040, 757840041, 757840046, 757840047, 757840121, 757840045, 757840127, 757840007, 757840048, 757840049. 2)REMOVED SHEET 5 AND REMOVED 26 CKT ITEM NUMBERS
D8	2024/02/23	75784-0136 & 75784-0137, MENTIONED PART NUMBER HAVE BEEN RE-ADDED TO THE SHEET 5.
D9	2024/05/08	REMOVED OBSOLETED PART NUMBERS 75784-0110, 75784-0112, 75784-0125, 75784-0147 & 75784-0148

THIS DRAWING CONTAINS INFORMATION THAT IS PROPRIETARY TO MOLEX ELECTRONIC TECHNOLOGIES, LLC AND SHOULD NOT BE USED WITHOUT WRITTEN PERMISSION

DIMENSION UNITS	SCALE
mm	1:1

GENERAL TOLERANCES (UNLESS SPECIFIED)

ANGULAR TOL	± 0.5°
4 PLACES	±
3 PLACES	±
2 PLACES	± 0.130
1 PLACE	± 0.25
0 PLACES	±

DRAFT WHERE APPLICABLE MUST REMAIN WITHIN DIMENSIONS

CURRENT REV DESC: REMOVED OBSOLETED PART NUMBERS 75784-0110, 75784-0112, 75784-0125, 75784-0147 & 75784-0148

STATUS: Production
DRWN: Vishal Ramesh Hosur 2024-05-08
CHK'D: Ganesh Rao B 2024-05-20
APPR: Gurunandan GA 2024-05-20

THIRD ANGLE PROJECTION | DRAWING: C-SIZE | SERIES: 75784

molex

I-PASS VERT CONNECTOR
INTERNAL ASSY W/SHELL 0.8MM PITCH I/O

PRODUCT SALES DRAWING

DOCUMENT NUMBER	DOC TYPE	DOC PART	REVISION
SD-75784-001	PSD	001	D9

MATERIAL NUMBER	CUSTOMER	SHEET NUMBER
SEE TABLE	GENERAL MARKET	12 OF 12

FORMAT TC-dpros-C
REVISION: B
DATE: 2022/08/01