THIS DRAWING IS UNPUBLISHED. RELEASED FOR PUBLICATION -,- .
© COPYRIGHT - By - ALL RIGHTS RESERVED.

LOC	DIST
BD	39

REVISIONS

P	LTR	DESCRIPTION	DATE	DWN	APVD
	W2	REVISED PER ECO-13-009250	27JUN13	KH	MZ

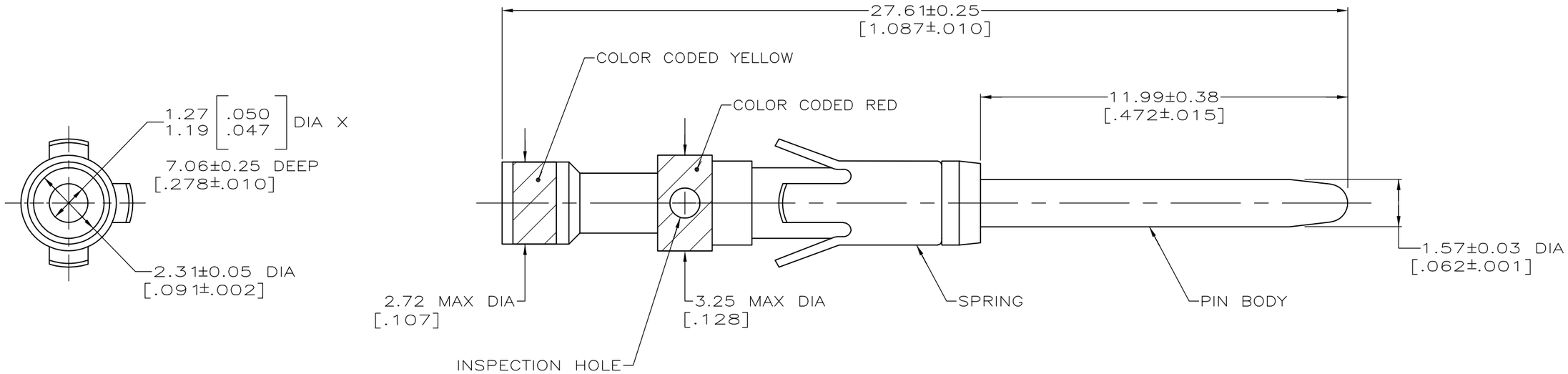

2	OBSOLETE	SMALL PACK	~~201330-7~~
	OBSOLETE	~~TAPE MTG (SEE DETAIL)~~ 2	~~201330-6~~
		STANDARD	201330-1
		PACKAGING TYPE	PART NO

1. 0.76μm [.000030] MIN GOLD OVER 1.27μm [.000050] MIN NICKEL.
2. OBSOLETE PARTS: OBSOLETE CIS STREAMLINING PER D.RENAUD/D.SINISI

THIS DRAWING IS A CONTROLLED DOCUMENT.

DIMENSIONS: mm [INCHES]

TOLERANCES UNLESS OTHERWISE SPECIFIED:
0 PLC ±-
1 PLC ±-
2 PLC ±-
3 PLC ±-
4 PLC ±-
ANGLES ±-

MATERIAL
PIN BODY: COPPER ALLOY
SPRING: STAINLESS STEEL

FINISH
PIN BODY: 1

DWN	D.GELTZ	04/06/93
CHK	R.STONE	4-26-93
APVD	R.S.KLINE	4-29-93
PRODUCT SPEC	—	
APPLICATION SPEC	—	
WEIGHT	—	

TE Connectivity

NAME
CONTACT ASSEMBLY, PIN,
16, 20-24 AWG, TYPE II

SIZE	CAGE CODE	DRAWING NO	RESTRICTED TO
A3	00779	C-201330	—

CUSTOMER DRAWING

SCALE	SHEET	REV
10:1	1 OF 1	W2