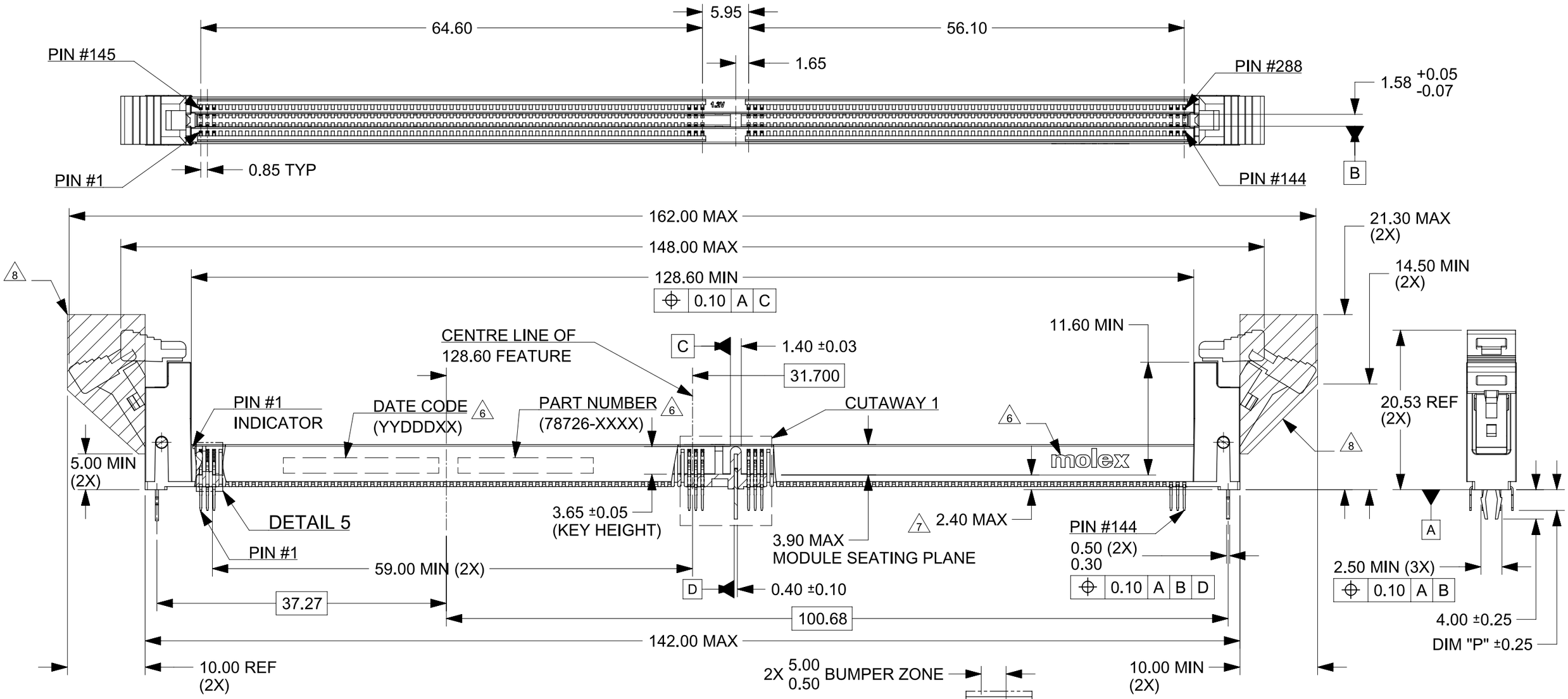

DETAIL 5 : BUMPER ZONE

NOTES:

1. MATERIAL : HOUSING - HALOGEN FREE HIGH TEMP POLYAMIDE, GLASS FILLED, UL94V-0.
   COLOUR : SEE TABLE ON SHEET 5.
   LATCH - HALOGEN FREE HIGH TEMP POLYAMIDE, GLASS FILLED, UL94V-0.
   COLOUR : SEE TABLE ON SHEET 5.
   TERMINAL : COPPER ALLOY.
   FORKLOCK: COPPER ALLOY.
2. FINISHES - SEE TABLE ON SHEET 5.
3. PRODUCT SPECIFICATION : SEE TABLE ON SHEET 5.
4. PACKAGING SPECIFICATION: PRODUCT SHALL BE PACKED IN TRAY, SEE SHEET 5
5. CARD SLOT ACCEPTS 1.40±0.10MM MODULE THICKNESS (MEASURED OVER P.C. PADS).

6 MOLEX LOGO, DATE & PART NO. INDICATED ON HOUSING.
7 MODULE SEATING PLANE.
8 KEEP OUT ZONE RESERVED FOR LATCH.
9 KEEP OUT AREA IS THE AREA WHERE THE CONNECTOR (INCLUDES LATCHES IN OPENING POSITION) IS MOUNTED ON THE PCB.

10. REFER TO AS-78726-001 FOR CONNECTOR APPLICATION GUIDELINE.
11. REFER TO AS-78726-002 FOR PCB ROUTING RECOMMENDATIONS.

THIS DRAWING CONTAINS INFORMATION THAT IS PROPRIETARY TO MOLEX ELECTRONIC TECHNOLOGIES, LLC AND SHOULD NOT BE USED WITHOUT WRITTEN PERMISSION

DIMENSION UNITS	SCALE
MM	NTS

GENERAL TOLERANCES (UNLESS SPECIFIED)

ANGULAR TOL	± 3°
4 PLACES	±
3 PLACES	±
2 PLACES	± 0.200
1 PLACE	±
0 PLACES	±

DRAFT WHERE APPLICABLE MUST REMAIN WITHIN DIMENSIONS

CURRENT REV DESC: REMOVED OBSOLETED PART NUMBERS AS PER PCN#516673

STATUS:	Production	
DRWN:	Sampreet S Mirajkar	2026-02-09
CHK'D:	Ganesh Rao B	2026-03-18
APPR:	Gurunandan GA	2026-03-20

THIRD ANGLE PROJECTION | DRAWING: A3-SIZE | SERIES: 78726

molex

DDR4 DIMM, 0.85MM PITCH
288CKTS, VERTICAL TH

PRODUCT CUSTOMER DRAWING

DOCUMENT NUMBER	DOC TYPE	DOC PART	REVISION
SD-78726-002	PSD	000	A12

MATERIAL NUMBER	CUSTOMER	SHEET NUMBER
SEE TABLE	GENERAL MARKET	1 OF 6

FORMAT: TC-tb-prod-A3
REVISION: B
DATE: 2022/08/01

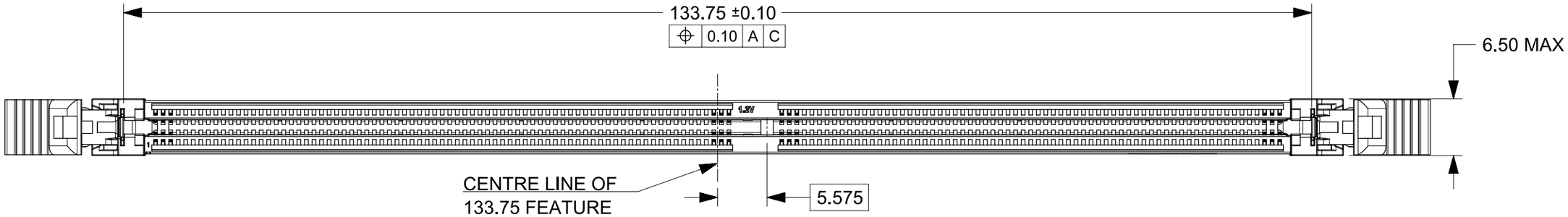

TOP VIEW
LATCH OPENING POSITION

ISO VIEW
LATCH CLOSED POSITION

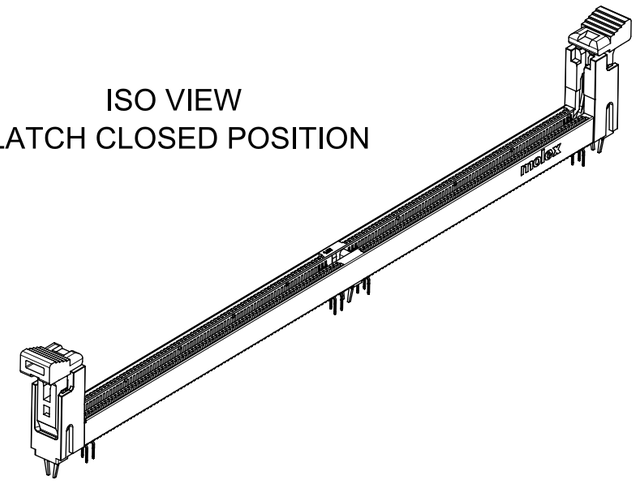

ISO VIEW
LATCH OPENED POSITION

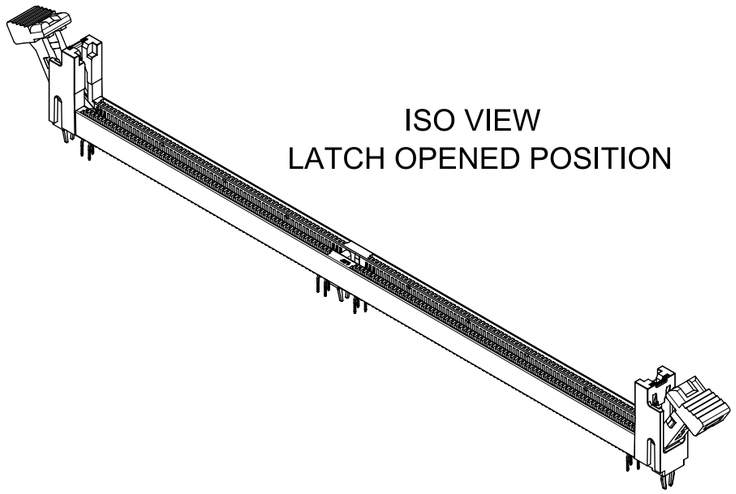

THIS DRAWING CONTAINS INFORMATION THAT IS PROPRIETARY TO MOLEX ELECTRONIC TECHNOLOGIES, LLC AND SHOULD NOT BE USED WITHOUT WRITTEN PERMISSION

DIMENSION UNITS	SCALE
MM	NTS

GENERAL TOLERANCES (UNLESS SPECIFIED)

ANGULAR TOL	± 3°
4 PLACES	±
3 PLACES	±
2 PLACES	± 0.200
1 PLACE	±
0 PLACES	±

DRAFT WHERE APPLICABLE MUST REMAIN WITHIN DIMENSIONS

CURRENT REV DESC: REMOVED OBSOLETED PART NUMBERS AS PER PCN#516673

STATUS: Production
DRWN: Sampreet S Mirajkar 2026-02-09
CHK'D: Ganesh Rao B 2026-03-18
APPR: Gurunandan GA 2026-03-20

THIRD ANGLE PROJECTION | DRAWING: A3-SIZE | SERIES: 78726

molex

DDR4 DIMM, 0.85MM PITCH
288CKTS, VERTICAL TH

PRODUCT CUSTOMER DRAWING

DOCUMENT NUMBER	DOC TYPE	DOC PART	REVISION
SD-78726-002	PSD	000	A12

MATERIAL NUMBER	CUSTOMER	SHEET NUMBER
SEE TABLE	GENERAL MARKET	2 OF 6

FORMAT: TC-4810-A3
REVISION: B
DATE: 2022/08/01

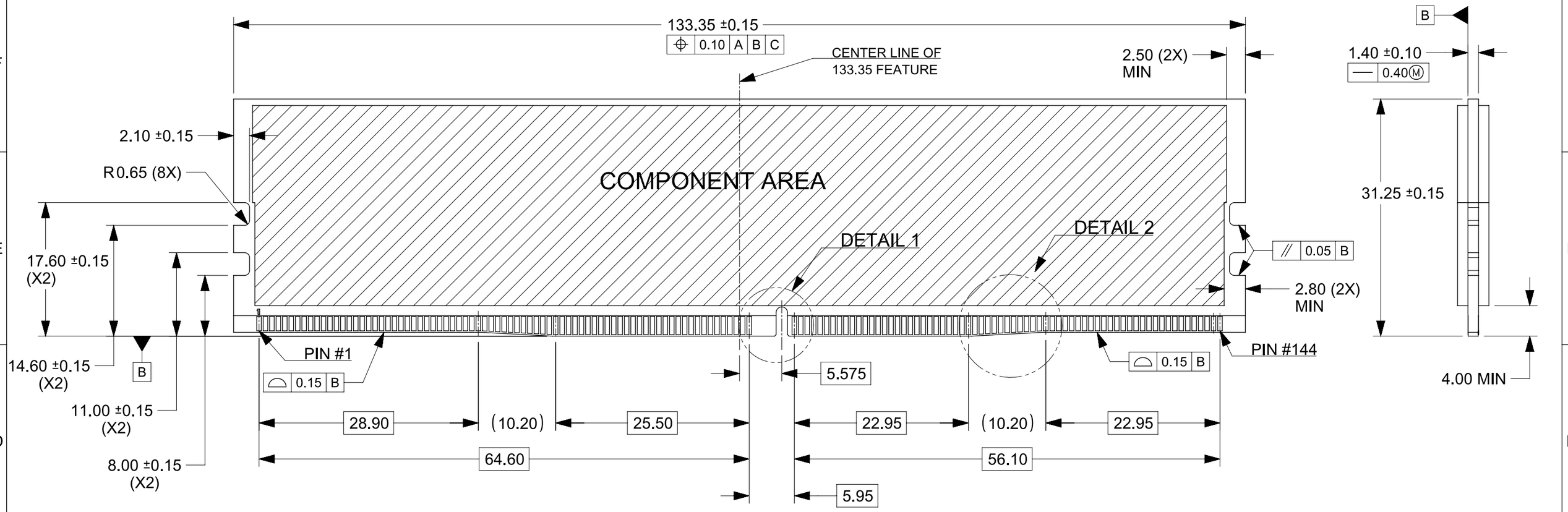

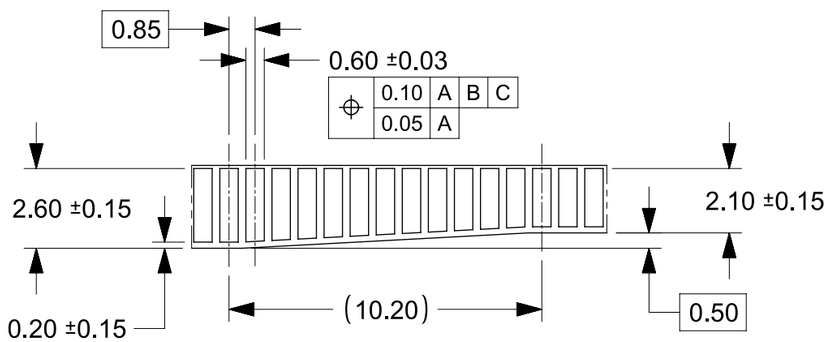

DETAIL 2

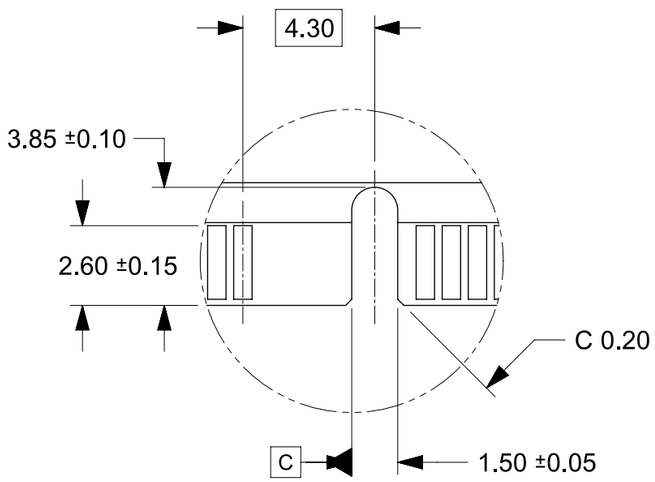

DETAIL 1

THIS DRAWING CONTAINS INFORMATION THAT IS PROPRIETARY TO MOLEX ELECTRONIC TECHNOLOGIES, LLC AND SHOULD NOT BE USED WITHOUT WRITTEN PERMISSION

DIMENSION UNITS	SCALE
MM	NTS

GENERAL TOLERANCES (UNLESS SPECIFIED)

ANGULAR TOL	± 3°
4 PLACES	±
3 PLACES	±
2 PLACES	± 0.200
1 PLACE	±
0 PLACES	±

DRAFT WHERE APPLICABLE MUST REMAIN WITHIN DIMENSIONS

CURRENT REV DESC: REMOVED OBSOLETED PART NUMBERS AS PER PCN#516673

STATUS: Production
DRWN: Sampreet S Mirajkar 2026-02-09
CHK'D: Ganesh Rao B 2026-03-18
APPR: Gurunandan GA 2026-03-20

THIRD ANGLE PROJECTION | DRAWING: A3-SIZE | SERIES: 78726

molex

DDR4 DIMM, 0.85MM PITCH
288CKTS, VERTICAL TH

PRODUCT CUSTOMER DRAWING

DOCUMENT NUMBER	DOC TYPE	DOC PART	REVISION
SD-78726-002	PSD	000	A12

MATERIAL NUMBER	CUSTOMER	SHEET NUMBER
SEE TABLE	GENERAL MARKET	3 OF 6

FORMAT: TC-[illegible]-A3
REVISION: B
DATE: 2022/08/[illegible]

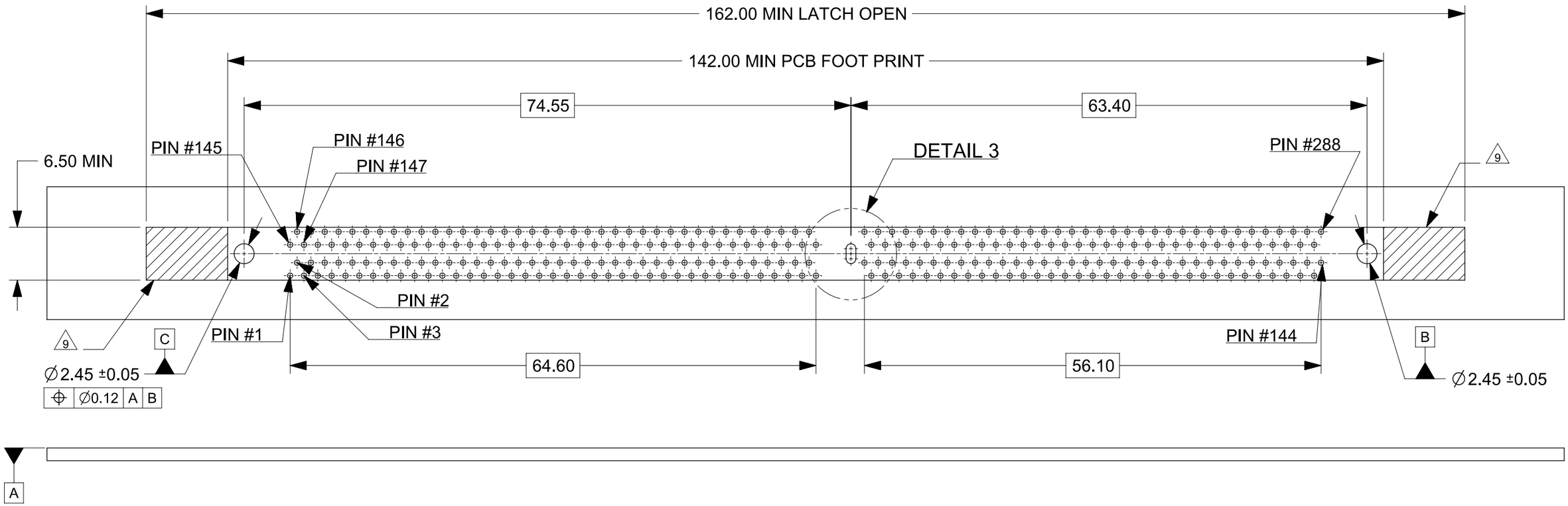

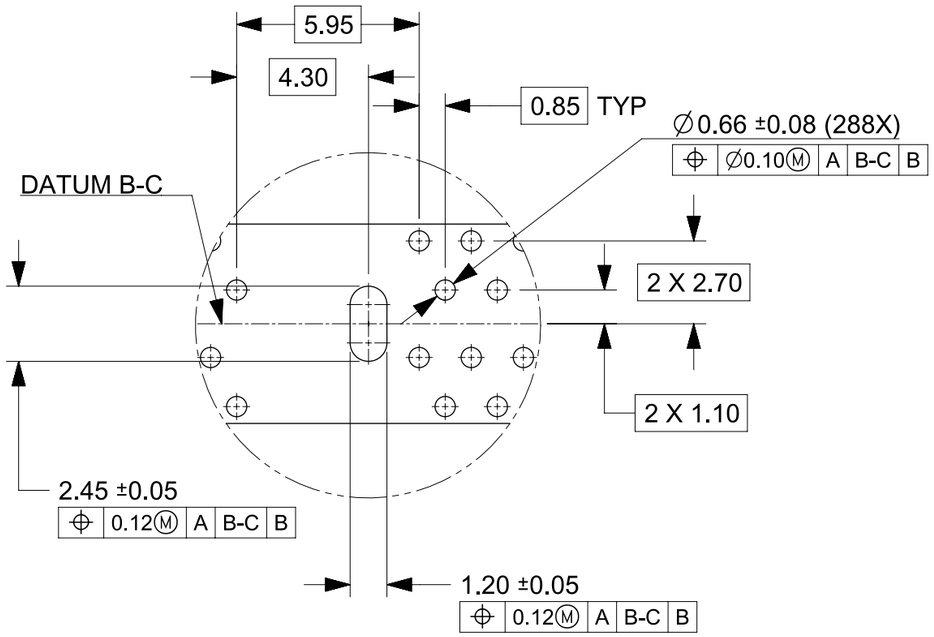

DETAIL 3

THIS DRAWING CONTAINS INFORMATION THAT IS PROPRIETARY TO MOLEX ELECTRONIC TECHNOLOGIES, LLC AND SHOULD NOT BE USED WITHOUT WRITTEN PERMISSION

DIMENSION UNITS	SCALE
MM	NTS

GENERAL TOLERANCES (UNLESS SPECIFIED)

ANGULAR TOL	± 3°
4 PLACES	±
3 PLACES	±
2 PLACES	± 0.200
1 PLACE	±
0 PLACES	±

DRAFT WHERE APPLICABLE MUST REMAIN WITHIN DIMENSIONS

CURRENT REV DESC: REMOVED OBSOLETED PART NUMBERS AS PER PCN#516673

STATUS: Production
DRWN: Sampreet S Mirajkar 2026-02-09
CHK'D: Ganesh Rao B 2026-03-18
APPR: Gurunandan GA 2026-03-20

THIRD ANGLE PROJECTION | DRAWING: A3-SIZE | SERIES: 78726

molex

DDR4 DIMM, 0.85MM PITCH
288CKTS, VERTICAL TH

PRODUCT CUSTOMER DRAWING

DOCUMENT NUMBER	DOC TYPE	DOC PART	REVISION
SD-78726-002	PSD	000	A12

MATERIAL NUMBER	CUSTOMER	SHEET NUMBER
SEE TABLE	GENERAL MARKET	4 OF 6

FORMAT: TC-4810-A3
REVISION: B
DATE: 2022/08/01

CKT SIZE	ASSEMBLY PART NO.	HOUSING COLOR	LATCH COLOR	DIM "P"	RECOMMENDED PCB THICKNESS	PLATING OPTION		PRODUCT SPEC. NO.	PACKAGING SPEC. NO.
						TERMINAL	FORKLOCK		
288	78726-1003	BLACK	BLACK	3.18	2.36	0.76 MICROMETER (30 MICROINCH) MIN GOLD ON CONTACT 2.54 MICROMETER (100 MICROINCH) MIN TIN ON SOLDERTAILS 1.27 MICROMETER (50 MICROINCH) MIN NICKEL UNDERPLATE	1 MICROMETER (40 MICROINCH) MIN TIN OVERALL (PRE-PLATED)	PS-78726-001	PK-78726-001

THIS DRAWING CONTAINS INFORMATION THAT IS PROPRIETARY TO MOLEX ELECTRONIC TECHNOLOGIES, LLC AND SHOULD NOT BE USED WITHOUT WRITTEN PERMISSION

DIMENSION UNITS	SCALE
MM	NTS

GENERAL TOLERANCES (UNLESS SPECIFIED)

ANGULAR TOL	± 3°
4 PLACES	±
3 PLACES	±
2 PLACES	± 0.200
1 PLACE	±
0 PLACES	±

DRAFT WHERE APPLICABLE MUST REMAIN WITHIN DIMENSIONS

CURRENT REV DESC: REMOVED OBSOLETED PART NUMBERS AS PER PCN#516673

STATUS: Production
DRWN: Sampreet S Mirajkar 2026-02-09
CHK'D: Ganesh Rao B 2026-03-18
APPR: Gurunandan GA 2026-03-20

THIRD ANGLE PROJECTION | DRAWING: A3-SIZE | SERIES: 78726

molex

DDR4 DIMM, 0.85MM PITCH
288CKTS, VERTICAL TH

PRODUCT CUSTOMER DRAWING

DOCUMENT NUMBER	DOC TYPE	DOC PART	REVISION
SD-78726-002	PSD	000	A12

MATERIAL NUMBER	CUSTOMER	SHEET NUMBER
SEE TABLE	GENERAL MARKET	5 OF 6

CKT SIZE	ASSEMBLY PART NO.	HOUSING COLOR	LATCH COLOR	DIM "P"	RECOMMENDED PCB THICKNESS	PLATING OPTION		PRODUCT SPEC. NO.	PACKAGING SPEC. NO.
						TERMINAL	FORKLOCK		
288	78726-1048	WHITE	WHITE	2.40	1.57	0.38 MICROMETER (15 MICROINCH) MIN GOLD ON CONTACT	1 MICROMETER (40 MICROINCH) MIN TIN OVERALL (PRE-PLATED)	PS-78726-002	PK-78726-001
	78726-3012	BLACK	BLACK	2.67	1.57	2.54 MICROMETER (100 MICROINCH) MIN TIN ON SOLDERTAILS			787260003
	78726-3020	BLUE	BLUE	2.67	1.57	1.27 MICROMETER (50 MICROINCH) MIN NICKEL UNDERPLATE			

THIS DRAWING CONTAINS INFORMATION THAT IS PROPRIETARY TO MOLEX ELECTRONIC TECHNOLOGIES, LLC AND SHOULD NOT BE USED WITHOUT WRITTEN PERMISSION

DIMENSION UNITS	SCALE
MM	NTS

GENERAL TOLERANCES (UNLESS SPECIFIED)

ANGULAR TOL	± 3°
4 PLACES	±
3 PLACES	±
2 PLACES	± 0.200
1 PLACE	±
0 PLACES	±

DRAFT WHERE APPLICABLE MUST REMAIN WITHIN DIMENSIONS

CURRENT REV DESC: REMOVED OBSOLETED PART NUMBERS AS PER PCN#516673

STATUS: Production
DRWN: Sampreet S Mirajkar 2026-02-09
CHK'D: Ganesh Rao B 2026-03-18
APPR: Gurunandan GA 2026-03-20

THIRD ANGLE PROJECTION | DRAWING: A3-SIZE | SERIES: 78726

molex

DDR4 DIMM, 0.85MM PITCH
288CKTS, VERTICAL TH

PRODUCT CUSTOMER DRAWING

DOCUMENT NUMBER	DOC TYPE	DOC PART	REVISION
SD-78726-002	PSD	000	A12

MATERIAL NUMBER	CUSTOMER	SHEET NUMBER
SEE TABLE	GENERAL MARKET	6 OF 6

FORMAT: TC-tb-prod-A3
REVISION: B
DATE: 2022/08/01