NUMBER OF CIRCUITS "XX"	MATERIAL NO.	ENG. NO.	DIM. "A"	DIM. "B"	DIM. "C"	
02	399801302	980902-1	10.8 [.43]	5.08 [.200]	5.08 [.200]	
03	399801303	980903-1	15.9 [.63]	10.16 [.400]	10.16 [.400]	
04	399801304	980904-1	20.9 [.83]	15.24 [.600]	10.16 [.400]	
05	399801305	980905-1	26.0 [1.03]	20.32 [.800]	10.16 [.400]	
06	399801306	980906-1	31.1 [1.23]	25.40 [1.000]	15.24 [.600]	
07	399801307	980907-1	36.2 [1.43]	30.48 [1.200]	15.24 [.600]	
08	399801308	980908-1	41.3 [1.63]	35.56 [1.400]	20.32 [.800]	
09	399801309	980909-1	46.3 [1.83]	40.64 [1.600]	20.32 [.800]	B2
10	399801310	980910-1	51.4 [2.03]	45.72 [1.800]	25.40 [1.000]	
11	399801311	980911-1	56.5 [2.23]	50.80 [2.000]	25.40 [1.000]	B2
12	399801312	980912-1	61.6 [2.43]	55.88 [2.200]	30.48 [1.200]	
13	399801313	980913-1	66.7 [2.63]	60.96 [2.400]	30.48 [1.200]	
14	399801314	980914-1	71.8 [2.83]	66.04 [2.600]	35.56 [1.400]	B2
15	399801315	980915-1	76.9 [3.03]	71.12 [2.800]	35.56 [1.400]	B2
16	399801316	980916-1	81.9 [3.23]	76.20 [3.000]	40.64 [1.600]	B2
17	399801317	980917-1	87.0 [3.43]	81.28 [3.200]	40.64 [1.600]	
18	399801318	980918-1	92.2 [3.63]	86.36 [3.400]	45.72 [1.800]	
19	399801319	980919-1	97.3 [3.83]	91.44 [3.600]	45.72 [1.800]	B2
20	399801320	980920-1	102.4 [4.03]	96.52 [3.800]	50.80 [2.000]	B2
21	399801321	980921-1	107.4 [4.23]	101.60 [4.000]	50.80 [2.000]	B2
22	399801322	980922-1	112.5 [4.43]	106.68 [4.200]	55.88 [2.200]	B2
23	399801323	980923-1	117.6 [4.63]	111.76 [4.400]	55.88 [2.200]	B2
24	399801324	980924-1	122.7 [4.83]	116.84 [4.600]	60.96 [2.400]	B2

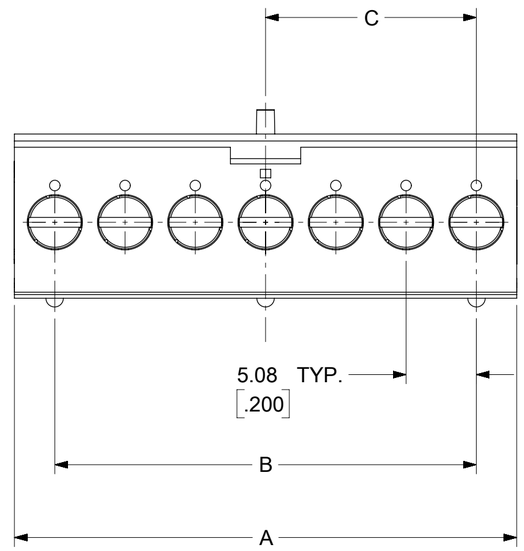

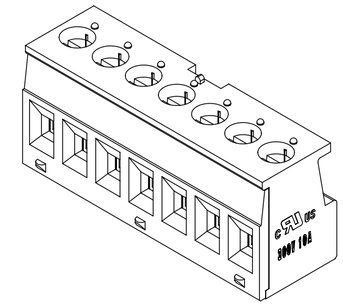

7 CIRCUIT SHOWN
SCALE 2:1

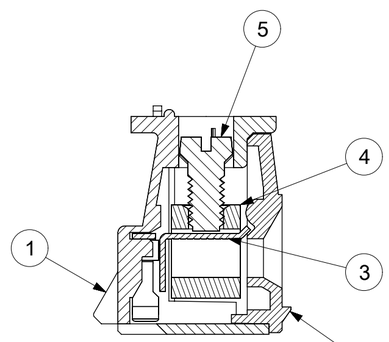

SECTION Z-Z

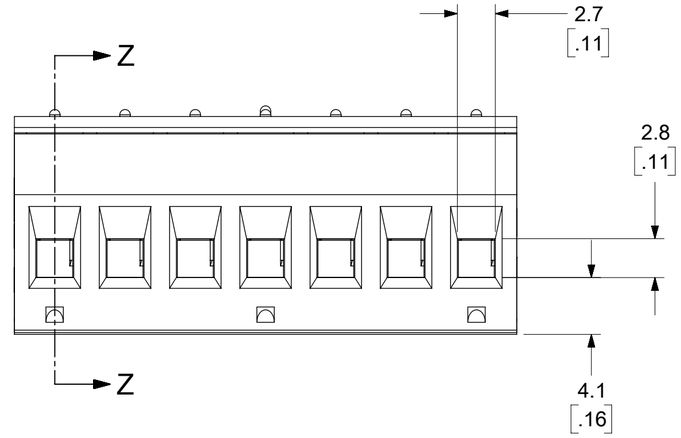

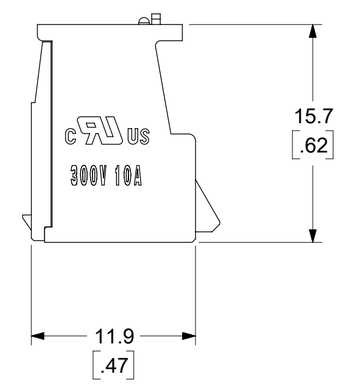

NOTES:
1. MATERIAL: SEE TABLE
2. FINISHES: SEE TABLE
3. ELECTRICAL SPECIFICATIONS
   VOLTAGE RATING: 300V AC/DC
   CURRENT RATING: 10 AMPS
4. WIRE RANGE: 4.0-0.25mm² (12-24 AWG)
5. RECOMMENDED SCREW TORQUE: 0.56 Nm [5 IN-LB]
6. MATES WITH: 3998004XX HEADER ASSEMBLY
7. ASSEMBLY IS TO BE RoHS COMPLIANT
8. UL FILE: E48521
9. DIMS. SHOWN ARE FOR REFERENCE ONLY

ITEM	QTY.	DESCRIPTION	MATERIAL	FINISH
5	XX	SCREW, M3X0.5 CHS, SLOTTED	STEEL	ZN, CLEAR CHROMATE
4	XX	CAGE, RISING(*)	BRASS	NICKEL PLATED
3	XX	TERMINAL PLUG	PHOS. BRONZE	HOT TIN DIP
2	1	COVER, 5.08mm PLUG, SINGLE ROW	NYLON 66, GLASS FILLED	BLACK
1	1	BODY, 5.08mm PLUG, SINGLE ROW	NYLON 66, GLASS FILLED	BLACK

TOLERANCES			
MM	TOL	INCH	TOL
0-6	±0.25	0-.24	±.010
>6-30	±0.40	.24-1.18	±.016
>30-120	±0.50	1.18-4.76	±.020
>120	±0.80	>4.76	±.031

THIS DRAWING CONTAINS INFORMATION THAT IS PROPRIETARY TO MOLEX ELECTRONIC TECHNOLOGIES, LLC AND SHOULD NOT BE USED WITHOUT WRITTEN PERMISSION

SYMBOLS: FA = 0; FC = 0; FP = 0; S = 0; ▼ = 0; C = 0; ☒ = 0; ■ = 0; V = 0

DIMENSION UNITS: MM[INCH] — SCALE: 3:1

GENERAL TOLERANCES (UNLESS SPECIFIED)

	MM	INCH
4 PLACES	± ---	± ---
3 PLACES	± ---	± SEE CHART
2 PLACES	± SEE CHART	± SEE CHART
1 PLACE	± SEE CHART	± ---
0 PLACES	± ---	± ---
ANGULAR TOL	± 2°	

DRAFT WHERE APPLICABLE MUST REMAIN WITHIN DIMENSIONS

CURRENT REV DESC: ADDED NEW PN'S

EC NO: 611677
DRWN: ABENJAMINLW 2018/04/27
CHK'D: MBRZOZOWSKI 2019/02/07
APPR: JFMURPHY 2019/02/20

INITIAL REVISION:
DRWN: RSTONE 2013/07/16
APPR: JFMURPHY 2014/02/13

THIRD ANGLE PROJECTION | DRAWING: C-SIZE | SERIES: 39980

molex

PLUG ASSEMBLY
5.08MM SINGLE ROW

PRODUCT CUSTOMER DRAWING

DOCUMENT NUMBER	DOC TYPE	DOC PART	REVISION
SD-39980-009	PSD	001	B2

MATERIAL NUMBER	CUSTOMER	SHEET NUMBER
SEE TABLE	SCHNEIDER	1 OF 1

DOCUMENT STATUS	P1	RELEASE DATE	2019/02/20	22:36:13

FORMAT: Eng-tega-master-tb-prod-C
REVISION: D
DATE: 2018/01/18