CIRCUIT SIZE	DIM. "A"	DIM. "B"	DIM. "C"
2	——	.21 (5.4)	.370 (9.40)
4	.17 (4.2)	.38 (9.6)	.535 (13.60)
6	.33 (8.4)	.54 (13.8)	.701 (17.80)
8	.50 (12.6)	.71 (18.0)	.866 (22.00)
10	.66 (16.8)	.87 (22.2)	1.031 (26.20)
12	.83 (21.0)	1.04 (26.4)	1.197 (30.40)
14	.99 (25.2)	1.20 (30.6)	1.362 (34.60)
16	1.16 (29.4)	1.37 (34.8)	1.528 (38.80)
18	1.32 (33.6)	1.54 (39.0)	1.693 (43.00)
20	1.49 (37.8)	1.70 (43.2)	1.858 (47.20)
22	1.65 (42.0)	1.87 (47.4)	2.024 (51.40)
24	1.82 (46.2)	2.03 (51.6)	2.189 (55.60)

NOTES

1) HOUSING MATERIAL AND OPTIONS:
   SEE CHARACTERISTICS LEGEND ON SHEET 2
   TERMINAL MATERIAL: BRASS ALLOY

2) TERMINAL PLATING:
   "A"= .000100/(.00254) MIN. MATTE TIN OVER .000050/(.00127) MIN. NICKEL. OVERALL
   "D"= .000100/(.00254) MIN. BRIGHT TIN OVER .000050/(.00127) MIN. NICKEL. OVERALL
   "E"= .000030/(.00076) MIN. SELECT GOLD, .000100/(.00254) MIN. SELECT
   MATTE TIN, OVER .000050/(.00127) MIN. NICKEL OVERALL

3) PRODUCT SPECIFICATION: PS-5556-001

4) PACKAGING SPECIFICATION: SEE CHART ON SHEET 2

5) PART MATES WITH MINI-FIT JR RECEPTACLE #5557

6) PARTS ARE NOT DESIGNED FOR CURRENT SHARING.

7) PART CONFORMS TO CLASS "B" REQUIREMENTS OF COSMETIC SPECIFICATION PS-45499-002

8) CONNECTOR ASSEMBLIES ARE NOT TO BE MATED OR UNMATED WHILE CIRCUITS ARE LIVE

9) TEXT ON PART IS FOR REFERENCE ONLY. TEXT AND TEXT LOCATION MAY VARY DEPENDING ON PART NUMBER AND/OR TOOL.

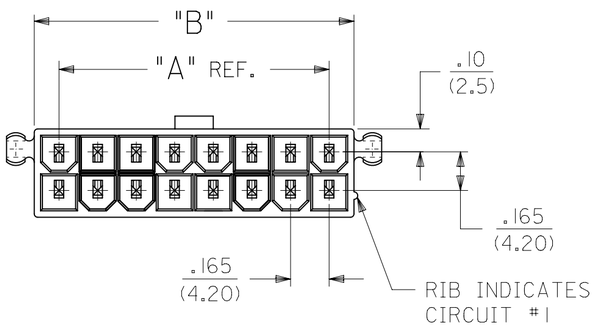

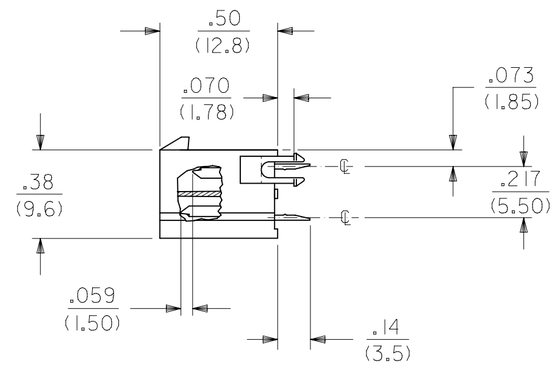

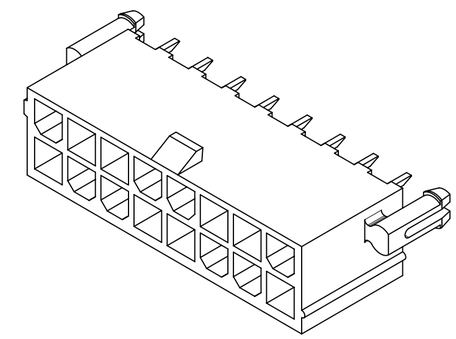

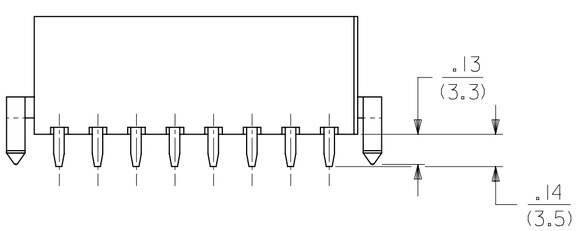

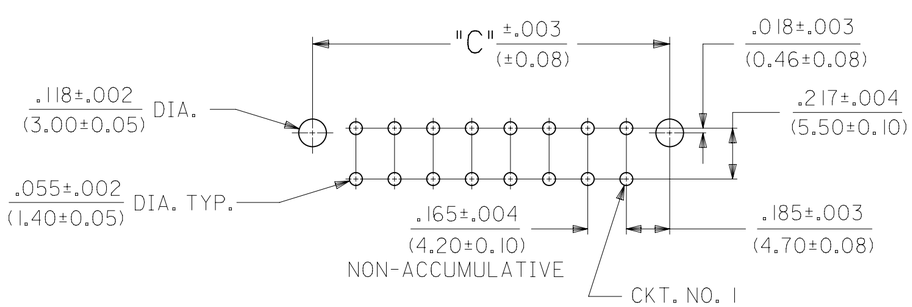

RECOMMENDED HOLE LAYOUT FOR .070/(1.78) MAX. THICK P.C. BOARD

VIEWED FROM COMPONENT SIDE

THIS DRAWING CONTAINS INFORMATION THAT IS PROPRIETARY TO MOLEX ELECTRONIC TECHNOLOGIES, LLC AND SHOULD NOT BE USED WITHOUT WRITTEN PERMISSION

DIMENSION UNITS	SCALE
IN/MM	NTS

GENERAL TOLERANCES (UNLESS SPECIFIED)

	MM	INCH
4 PLACES	±	±
3 PLACES	±	± 0.015
2 PLACES	± 0.38	± 0.02
1 PLACE	± 0.5	±
0 PLACES	±	±
ANGULAR TOL	± 0.5 °	

DRAFT WHERE APPLICABLE MUST REMAIN WITHIN DIMENSIONS

CURRENT REV DESC:

EC NO: 821586
DRWN: JERRYW8 2025/05/09
CHK'D: XQZHANG 2025/05/09
APPR: XQZHANG 2025/05/09

INITIAL REVISION:
DRWN: AFG 1994/12/14
APPR: FSMITH 2011/06/17

THIRD ANGLE PROJECTION | DRAWING: C-SIZE | SERIES: 43460

molex

2-24 CKT VERT HDR ASSY
MIN-FIT JR MF/BL W/WO PEGS

PRODUCT CUSTOMER DRAWING

DOCUMENT NUMBER	DOC TYPE	DOC PART	REVISION
434600000-SD	PSD	000	A2

MATERIAL NUMBER	CUSTOMER	SHEET NUMBER
	GENERAL MARKET	1 OF 2

DOCUMENT STATUS	P1	RELEASE DATE	2025/05/09 08:41:32

THIS DRAWING REPLACES DRAWING SDA-43460-++++

FORMAT: Eng-tego-master-lb-prod-C
REVISION: E1
DATE: 2021/05/01

ITEM NO.	CHARACTERISTIC DESCRIPTION	TERMINAL VERSION REQUIRED AT EACH CIRCUIT LOCATION: (SEE CODES AT RIGHT)																								PACKAGING
		1	2	3	4	5	6	7	8	9	10	11	12	13	14	15	16	17	18	19	20	21	22	23	24	
43460-0011	02FAD	9	5	-	-	-	-	-	-	-	-	-	-	-	-	-	-	-	-	-	-	-	-	-	-	PK-5566-003
43460-0012	02AAA	8	1	-	-	-	-	-	-	-	-	-	-	-	-	-	-	-	-	-	-	-	-	-	-	PK-5566-001
43460-0013	08EAA	8	1	8	8	8	1	8	8	-	-	-	-	-	-	-	-	-	-	-	-	-	-	-	-	PK-5566-001
43460-0014	04FAA	1	8	8	8	-	-	-	-	-	-	-	-	-	-	-	-	-	-	-	-	-	-	-	-	PK-5566-001
43460-0015	24AAA	1	8	8	8	8	8	8	8	8	8	8	1	1	8	8	8	8	8	8	8	8	8	8	1	PK-5566-001
43460-0016	24AAE	3	10	10	10	10	10	10	10	10	10	10	3	3	10	10	10	10	10	10	10	10	10	10	3	PK-5566-001
43460-0017	06BAE	10	10	10	3	3	10	-	-	-	-	-	-	-	-	-	-	-	-	-	-	-	-	-	-	PK-5566-001
43460-0018	04FAE	3	3	10	10	-	-	-	-	-	-	-	-	-	-	-	-	-	-	-	-	-	-	-	-	PK-5566-001
43460-0019	10BAD	9	V	9	V	9	9	V	9	V	9	-	-	-	-	-	-	-	-	-	-	-	-	-	-	PK-5566-001

"V" = VOIDED PIN

TERM. CODES FOR CHART AT LEFT		
TERMINAL NO.	PLATING /	MATERIAL
1=MAKE-FIRST	A	BRASS
3=MAKE-FIRST	E	BRASS
5=MAKE-FIRST	D	BRASS
8=STANDARD	A	BRASS
9=STANDARD	D	BRASS
10=STANDARD	E	BRASS

CHARACTERISTICS LEGEND:

** * * *

CIRCUIT SIZE:
(02-24)

HOUSING MATERIAL AND OPTIONS:

"A"=NYLON 6/6, UNFILLED U.L. 94V-2, WITH PEGS, COLOR: NATURAL.
"B"=NYLON 6/6, UNFILLED U.L. 94V-0, WITH PEGS, COLOR: NATURAL.
"E"=NYLON 6/6, UNFILLED U.L. 94V-2, WITHOUT PEGS, COLOR: NATURAL.
"F"=NYLON 6/6, UNFILLED U.L. 94V-0, WITHOUT PEGS, COLOR: NATURAL.

TERMINAL MATERIAL:

"A"=BRASS ALLOY

TERMINAL PLATING (SEE NOTE 2):

"A"= 100 MIN. MATTE TIN OVER 50 MIN. NICKEL
"D"= 100 MIN. TIN OVER 50 MIN. NICKEL
"E"= 30 MIN. GOLD AND 100 MIN. MATTE TIN OVER 50 MIN. NICKEL

THIS DRAWING CONTAINS INFORMATION THAT IS PROPRIETARY TO MOLEX ELECTRONIC TECHNOLOGIES, LLC AND SHOULD NOT BE USED WITHOUT WRITTEN PERMISSION

DIMENSION UNITS	SCALE
IN/MM	NTS

GENERAL TOLERANCES (UNLESS SPECIFIED)

	MM	INCH
4 PLACES	±	±
3 PLACES	±	± 0.015
2 PLACES	± 0.38	± 0.02
1 PLACE	± 0.5	±
0 PLACES	±	±
ANGULAR TOL	± 0.5 °	

DRAFT WHERE APPLICABLE MUST REMAIN WITHIN DIMENSIONS

CURRENT REV DESC:

EC NO: 821586
DRWN: JERRYW8 2025/05/09
CHK'D: XQZHANG 2025/05/09
APPR: XQZHANG 2025/05/09

INITIAL REVISION:
DRWN: AFG 1994/12/14
APPR: FSMITH 2011/06/17

THIRD ANGLE PROJECTION | DRAWING: C-SIZE | SERIES: 43460

molex

2-24 CKT VERT HDR ASSY
MIN-FIT JR MF/BL W/WO PEGS

PRODUCT CUSTOMER DRAWING

DOCUMENT NUMBER	DOC TYPE	DOC PART	REVISION
434600000-SD	PSD	000	A2

MATERIAL NUMBER	CUSTOMER	SHEET NUMBER
	GENERAL MARKET	2 OF 2

THIS DRAWING REPLACES DRAWING SDA-43460-++++

DOCUMENT STATUS	P1	RELEASE DATE	2025/05/09 08:41:32

FORMAT: Eng-lega-master-lb-prod-C
REVISION: E1
DATE: 2021/05/01