ADAPTER P/N	SPRING LEVER COLOR	MATERIAL OF SLEEVE	SHELL COLOR
106160-0000	BLUE	ZR	BLUE
106161-0000		ZR, LOW COST	
106160-1000	BLACK	ZR	RED
106161-1000		ZR	
106160-2000		ZR	BLACK
106161-2000		ZR	
106160-3000	BLUE	ZR	GREEN
106161-3000		ZR, LOW COST	
106161-5000	BLACK	ZR	BEIGE

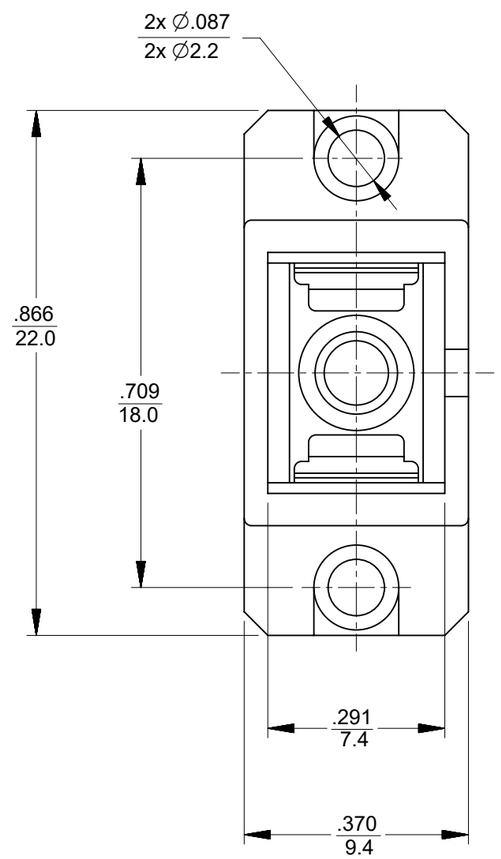

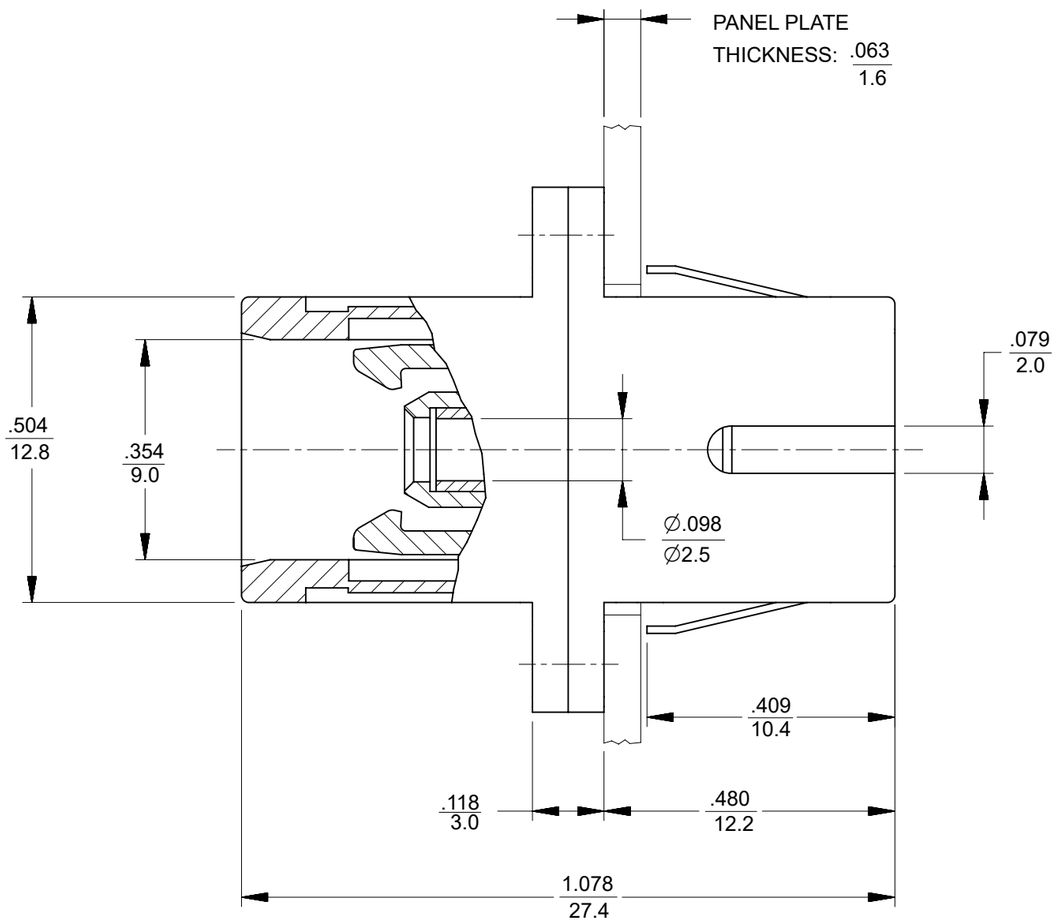

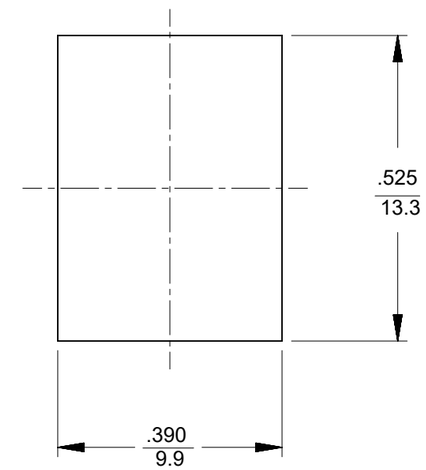

RECOMMENDED
MOUNTING HOLE

NOTES:

1. DUST CAPS ARE NOT SHOWN BUT INCLUDED.
2. ALL MATERIALS USED IN ADAPTER MEET UL94 V-0.

THIS DRAWING CONTAINS INFORMATION THAT IS PROPRIETARY TO MOLEX ELECTRONIC TECHNOLOGIES, LLC AND SHOULD NOT BE USED WITHOUT WRITTEN PERMISSION

DIMENSION UNITS	SCALE
INCH/MM	4:1

GENERAL TOLERANCES (UNLESS SPECIFIED)

	MM	INCH
4 PLACES	±	±
3 PLACES	±	±
2 PLACES	±	±
1 PLACE	±	±
0 PLACES	±	±
ANGULAR TOL	± 0.5 °	

DRAFT WHERE APPLICABLE MUST REMAIN WITHIN DIMENSIONS

CURRENT REV DESC: CORRECT DRAWING TYPE TO GERNERAL MARKET

EC NO: 799197
DRWN: JHUANG18 2024/09/24
CHK'D: IGUMIN 2024/09/26
APPR: IGUMIN 2024/09/26

INITIAL REVISION:
DRWN: RPACIFICI 2005/12/22
APPR: IGUMIN 2005/11/29

THIRD ANGLE PROJECTION | DRAWING: B-SIZE | SERIES: 106160

molex

SC TYPE ADAPTER

PRODUCT CUSTOMER DRAWING

DOCUMENT NUMBER	DOC TYPE	DOC PART	REVISION
SD-10616X-X000	PSD	001	D

MATERIAL NUMBER	CUSTOMER	SHEET NUMBER
SEE TABLE	GENERAL MARKET	1 OF 1

DOCUMENT STATUS	P1	RELEASE DATE	2024/09/26 06:35:30

FORMAT: Eng-lega-master-tb-prod-B
REVISION: E1
DATE: 2021/05/01