Alle Rechte vorbehalten/ *All rights reserved*

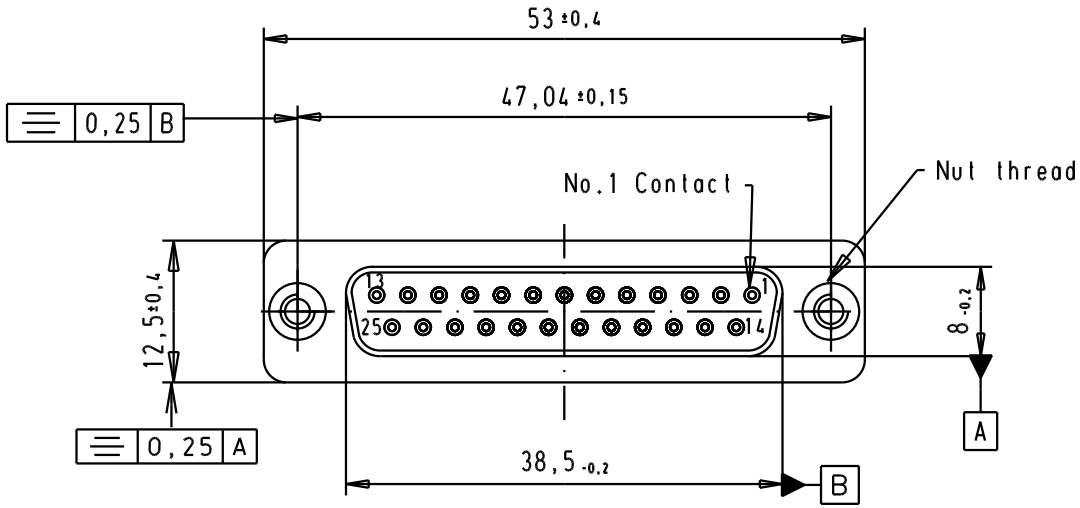


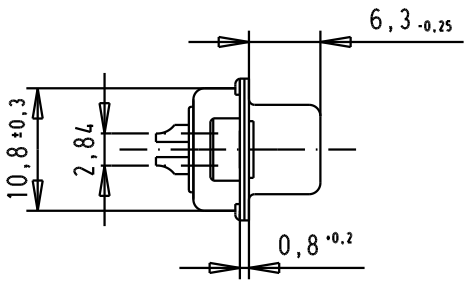


Solder buckets for AWG 20 Max

SPECIFICATION

| | |
|---|---|
| Mating Cycles | 500 |
| Filter type | C |
| Capacitance | 3900pf ±20% |
| Working Voltage | 100v |
| Current Rating | 7.5A |
| Insulation Resistance | >1GΩ |

| FREQUENCY (MHz) | ATTENUATION (dB) |
|---|---|
| 5 | 6dB |
| 10 | 11dB |
| 50 | 25dB |
| 100 | 35dB |
| 500 | 35dB |
| 1000 | 32dB |

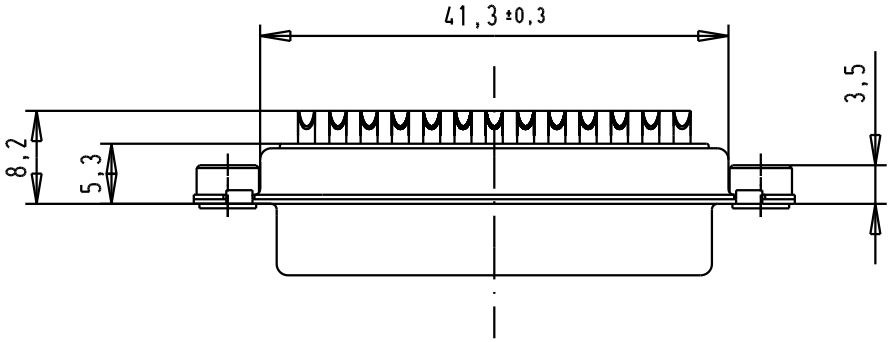


| | |
|---|---|
| 09643117248 | M3 |
| 09643117247 | UNC 4-40 |
| Part number | Nut thread |

| | | | | Dat. | Name |
|---|---|---|---|---|---|
| | | | Detail. | 8-JUL-02 | CV |
| | | | Insp. | | |
| 33271 | 28/11/05 | JMDR | Stand. | | |
| 32236 | 13/10/04 | TR | | | |
| 31058 | 8-JUL-02 | CV | | | |
| Mod. | Dat. | Name | | | |

All Dim. in mm
Orig. Size DIN A 4

D-Sub, Female, Straight
25 Poles, solder buckets,
tin plated shell with
clinch nuts

Maßstab/ *Scale* 1.5:1

HARTING EURL
F-95972 Paris

TB 0964311724x

Sub.

Blatt/ *Page* 1/1