THIS DRAWING IS UNPUBLISHED. RELEASED FOR PUBLICATION -.- .
© COPYRIGHT - By - ALL RIGHTS RESERVED.

LOC	DIST
GP	00

REVISIONS

P	LTR	DESCRIPTION	DATE	DWN	APVD
	C	REVISED PER ECO-12-000090	26JAN2012	CJV	SLB

1. FOR USE WITH 2.36 [.093] MINIMUM THICK PRINTED CIRCUIT BOARD. REFER TO APPLICATION SPECIFICATION FOR HOLE SIZE AND FINISH RECOMMENDATIONS.
2. HOUSING: NYLON OR POLYESTER, UL 94V-0 RATED, BLACK.
3. CONTACTS: COPPER ALLOY.
4. SHELL: CARBON STEEL.
5. SCREWLOCKS: ZINC.
6. SHIELD:1.27µm [.000050] MIN TIN OVER 0.13µm [.000005] MIN NICKEL STRIKE.
7. SHELL: 5.08µm [.000200] MIN TIN OVER 2.54µm [.000100] MIN COPPER.
8. CONTACTS:
   0.76 MICRO METERS [.000030] MINIMUM GOLD IN MATING AREA.
   2.54 MICRO METERS [.000100] MINIMUM TIN ON COMPLIANT PIN.
   ALL OVER 1.27 MICRO METERS [.000050] MINIMUM NICKEL.
   OR
   GOLD FLASH OVER PALLADIUM NICKEL.
   0.76 MICRO METERS [.000030] MINIMUM TOTAL IN MATING AREA.
   2.54 MICRO METERS [.000100] MINIMUM TIN ON COMPLIANT PIN.
   ALL OVER 1.27 MICRO METERS [.000050] MINIMUM NICKEL.
9. STAINLESS STEEL
10. DATUMS AND BASIC DIMENSIONS ESTABLISHED BY CUSTOMERS.
11. SCREWLOCKS: CLEAR CHROMATE

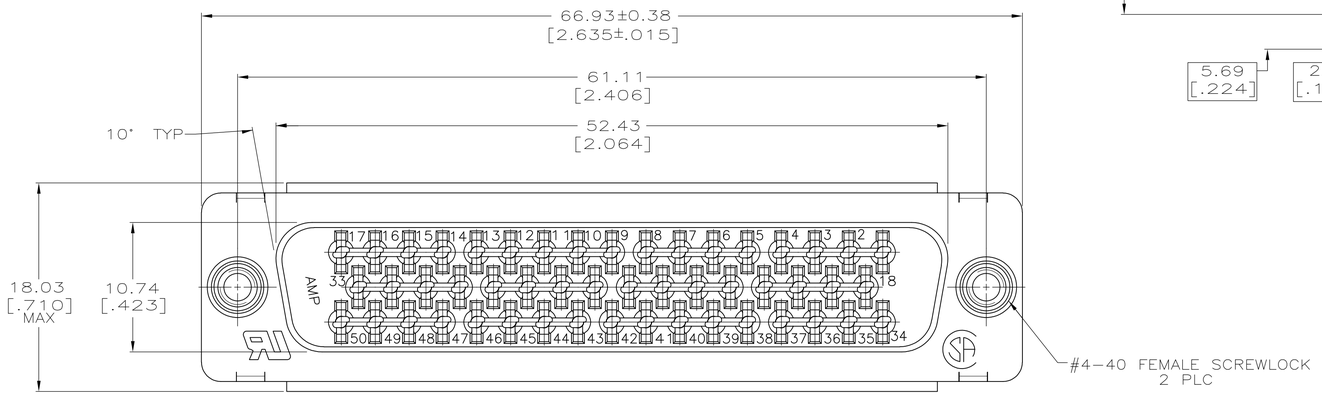

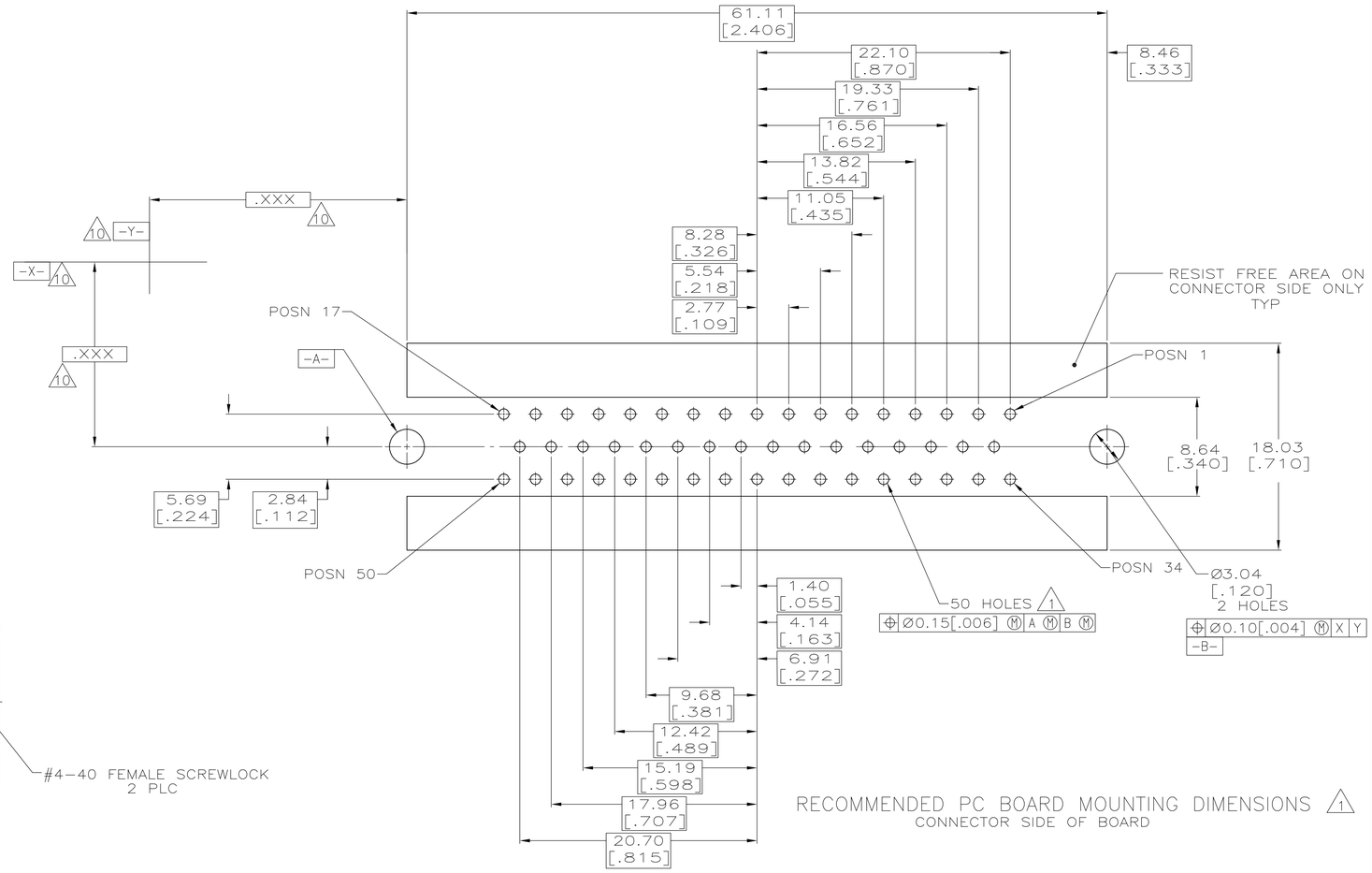

RECOMMENDED PC BOARD MOUNTING DIMENSIONS
CONNECTOR SIDE OF BOARD

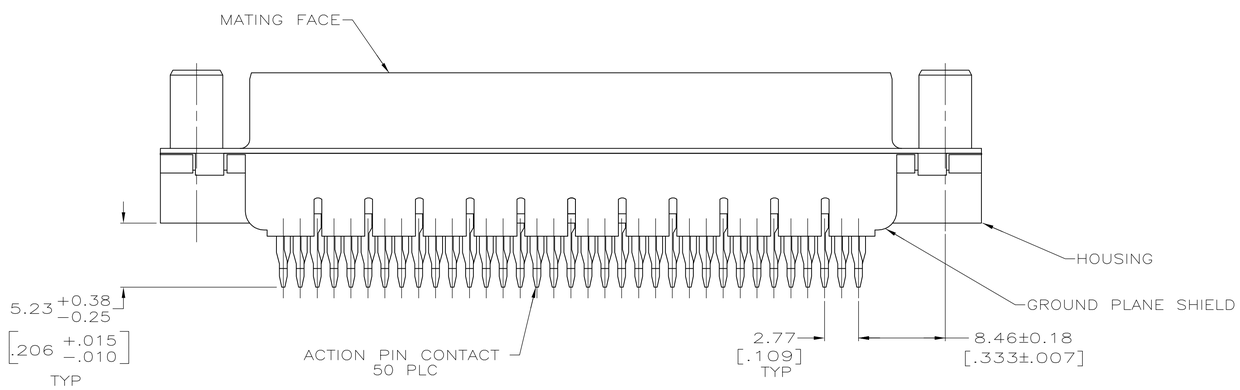

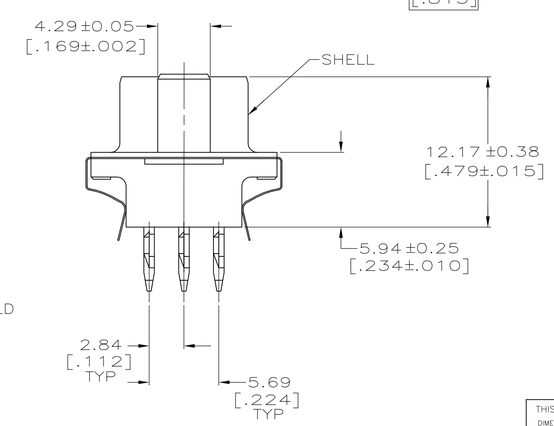

COPYRIGHT 2005
TYCO ELECTRONICS CORP
ALL RIGHTS RESERVED

THIS DRAWING IS A CONTROLLED DOCUMENT, DIMENSIONING AND TOLERANCING PER ASME Y14.5M-2009	DWN J. ALCORTA 04-04-05	TE Connectivity	5748443-2
DIMENSIONS: INCHES	CHK S. BOLASH 04-04-05		PART NO
TOLERANCES UNLESS OTHERWISE SPECIFIED: 0 PLC ± - 1 PLC ± - 2 PLC ± 0.13 [.005] 3 PLC ± - 4 PLC ± - ANGLES ± 2°	APVD M. WALMSLEY 04-04-05	NAME RECEPTACLE ASSEMBLY, SIZE 5, 50 POSITION, ACTION PIN, FRONT METAL SHELL AMPLIMITE HD-20	
	PRODUCT SPEC 108-40014		
	APPLICATION SPEC 114-40026 1	SIZE A1 / CAGE CODE 00779 / DRAWING NO C-5748443	RESTRICTED TO —
MATERIAL 2 3 4 5 9 / FINISH 6 7 8 11	WEIGHT —		
	CUSTOMER DRAWING	SCALE 4:1 / SHEET 1 OF 1	REV C