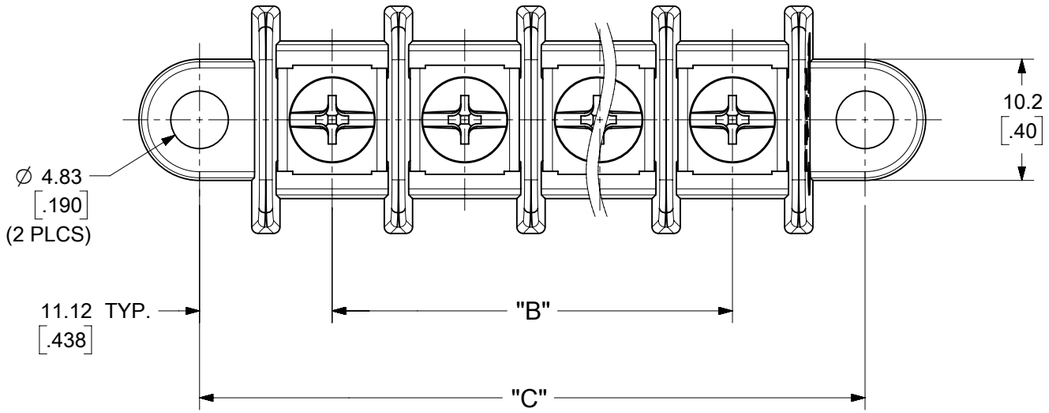

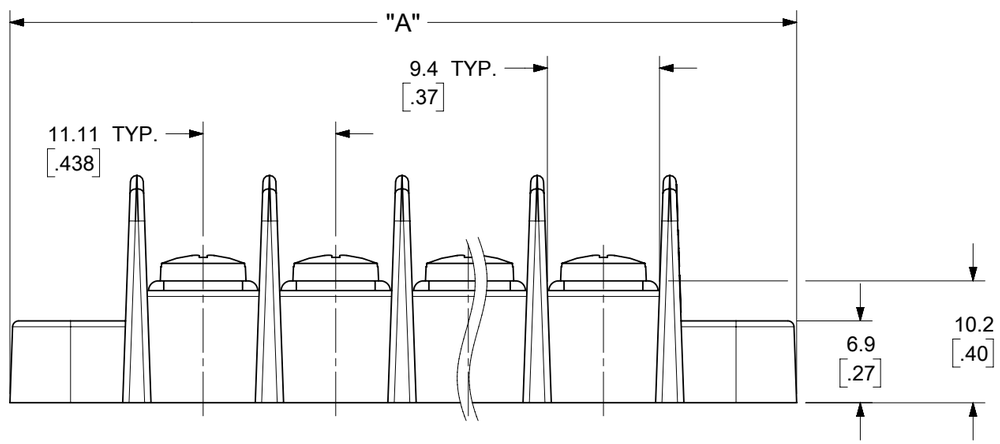

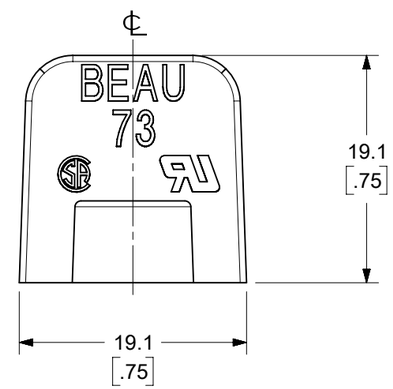

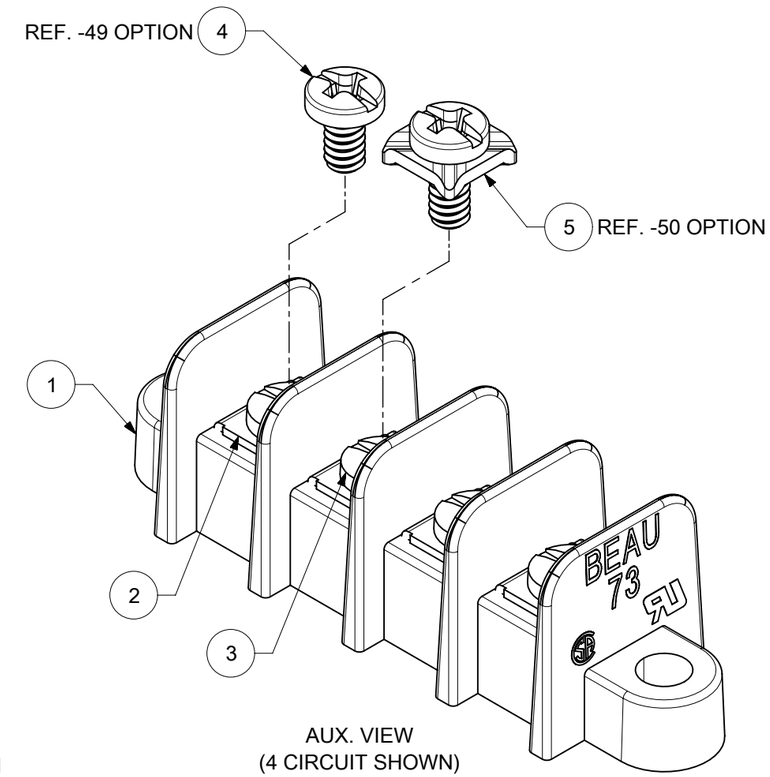

AUX. VIEW
(4 CIRCUIT SHOWN)

NOTES:
1. MATERIAL: SEE TABLE
2. FINISHES: SEE TABLE
3. PRODUCT SPECIFICATION: AS REQUIRED
4. "XX" REFERS TO THE QUANTITY OF CIRCUITS

TOLERANCES			
MM	TOL	INCH	TOL
0-6	±0.25	0-.24	±.010
>6-30	±0.40	>.24-1.18	±.016
>30-120	±0.50	>1.18-4.76	±.020
>120	±0.80	>4.76	±.031

ITEM	QTY.	DESCRIPTION	MATERIAL	FINISH
5	XX	SCREW,#6-32X.250,PAN,PH-SL W/SQ WSHR (-50 OPT)	STEEL	ZN, CLEAR CHROMATE
4	XX	SCREW,#6-32X.250,PAN,PHIL-SLOT (-49 OPT)	BRASS	NICKEL PLATE
3	XX	SCREW,#6-32X.250,BHD,PHIL-SLOT (STD)	STEEL	ZN, CLEAR CHROMATE
2	XX	TERMINAL, CLOSED BACK, 6C	BRASS	TIN PLATE
1	1	SR BTS CB MO MTG	POLYESTER (PBT)	BLACK

DOCUMENT STATUS	P1	RELEASE DATE	2023/02/24 09:10:41

FUNCTIONAL SYMBOLS: EA = 0, EC = 0, EP = 0
DIVISIONAL SYMBOLS

THIS DRAWING CONTAINS INFORMATION THAT IS PROPRIETARY TO MOLEX ELECTRONIC TECHNOLOGIES, LLC AND SHOULD NOT BE USED WITHOUT WRITTEN PERMISSION

DIMENSION UNITS: MM/INCH
SCALE: 2:1

GENERAL TOLERANCES (UNLESS SPECIFIED)

	MM	INCH
4 PLACES	± ---	± ---
3 PLACES	± ---	± SEE CHART
2 PLACES	± SEE CHART	± SEE CHART
1 PLACE	± SEE CHART	± ---
0 PLACES	± ---	± ---
ANGULAR TOL	± ---	

DRAFT WHERE APPLICABLE MUST REMAIN WITHIN DIMENSIONS

CURRENT REV DESC: REMOVED OBSOLETED PART NUMBER AS PER PCN#512245.

EC NO: 739748
DRWN: SANTHN 2023/02/22
CHK'D: GGA 2023/02/24
APPR: GGA 2023/02/24

INITIAL REVISION:
DRWN: JENCINAS 2008/04/30
APPR: JMACNEIL 2008/04/30

THIRD ANGLE PROJECTION

DRAWING: B-SIZE
SERIES: 38730

molex

.438" SINGLE ROW PCB
BARRIER TERMINAL STRIP

PRODUCT CUSTOMER DRAWING

DOCUMENT NUMBER	DOC TYPE	DOC PART	REVISION
SD-38730-005	PSD	001	B2

MATERIAL NUMBER	CUSTOMER	SHEET NUMBER
SEE SHEET-2	GENERAL MARKET	1 OF 2

NO. OF CIRCUITS	DIM. "A"		DIM. "B"		DIM. "C"		MATERIAL NO. (STANDARD)	MATERIAL NO. (-49 OPTIONAL)	MATERIAL NO. (-50 OPTIONAL)
	MM	INCH	MM	INCH	MM	INCH			
2	43.51	1.713	11.12	.438	33.35	1.313	---	---	---
3	54.62	2.150	22.21	.874	44.50	1.752	387300103	387300303	---
4	65.73	2.587	33.30	1.311	55.63	2.190	387300104	---	387301304
5	76.84	3.024	44.39	1.748	66.75	2.628	---	387300705	---
6	87.95	3.461	55.48	2.185	77.88	3.066	387300106	---	---
7	99.06	3.898	66.58	2.622	89.00	3.504	---	387300707	---
8	110.17	4.335	77.66	3.059	100.13	3.942	---	---	---
9	121.28	4.772	88.75	3.496	111.25	4.380	---	387300709	387301309
10	132.39	5.209	99.84	3.933	122.38	4.818	387300110	387300710	---
11	143.50	5.646	110.94	4.370	133.50	5.256	---	387300711	387301311
12	154.61	6.083	122.02	4.807	144.63	5.694	---	---	387301312
13	165.72	6.520	133.12	5.244	155.75	6.132	387300113	---	387301313
14	176.83	6.957	144.20	5.681	166.88	6.570	---	---	387301314
15	187.94	7.394	155.30	6.118	178.00	7.008	---	387300715	387301315
16	199.05	7.831	166.38	6.555	189.13	7.446	---	387300716	---
17	210.16	8.268	177.48	6.992	200.25	7.884	---	---	387301317
18	221.27	8.705	188.56	7.429	211.38	8.322	---	---	---
19	232.38	9.142	199.65	7.866	222.50	8.760	---	387300719	387301319
20	243.49	9.579	210.74	8.303	233.63	9.198	387300120	---	---
21	254.60	10.016	221.84	8.740	244.75	9.636	---	387300721	387301321
22	265.71	10.453	232.92	9.177	255.88	10.074	387300122	---	387301322
23	276.82	10.890	244.02	9.614	267.00	10.512	---	387300723	387301323
24	287.93	11.327	255.10	10.051	278.13	10.950	387300124	---	387301324
25	299.04	11.764	266.20	10.488	289.26	11.388	387300125	---	387301325
26	310.15	12.201	277.49	10.925	300.38	11.826	---	387300726	387301326

TOLERANCES			
MM	TOL	INCH	TOL
0-6	±0.25	0-.24	±.010
>6-30	±0.40	>.24-1.18	±.016
>30-120	±0.50	>1.18-4.76	±.020
>120	±0.80	>4.76	±.031

FUNCTIONAL SYMBOLS
EA = 0
EC = 0
EP = 0
DIVISIONAL SYMBOLS

THIS DRAWING CONTAINS INFORMATION THAT IS PROPRIETARY TO MOLEX ELECTRONIC TECHNOLOGIES, LLC AND SHOULD NOT BE USED WITHOUT WRITTEN PERMISSION

DIMENSION UNITS: MM/INCH
SCALE: 1:1

GENERAL TOLERANCES (UNLESS SPECIFIED)

	MM	INCH
4 PLACES	± ---	± ---
3 PLACES	± ---	± SEE CHART
2 PLACES	± SEE CHART	± SEE CHART
1 PLACE	± SEE CHART	± ---
0 PLACES	± ---	± ---
ANGULAR TOL	± ---	

DRAFT WHERE APPLICABLE MUST REMAIN WITHIN DIMENSIONS

CURRENT REV DESC: REMOVED OBSOLETED PART NUMBER AS PER PCN#512245.

EC NO: 739748
DRWN: SANTHN 2023/02/22
CHK'D: GGA 2023/02/24
APPR: GGA 2023/02/24

INITIAL REVISION:
DRWN: JENCINAS 2008/04/30
APPR: JMACNEIL 2008/04/30

THIRD ANGLE PROJECTION
DRAWING: B-SIZE
SERIES: 38730

molex

.438" SINGLE ROW PCB
BARRIER TERMINAL STRIP

PRODUCT CUSTOMER DRAWING

DOCUMENT NUMBER	DOC TYPE	DOC PART	REVISION
SD-38730-005	PSD	001	B2

MATERIAL NUMBER	CUSTOMER	SHEET NUMBER
SEE CHART	GENERAL MARKET	2 OF 2

DOCUMENT STATUS	P1	RELEASE DATE	2023/02/24 09:10:41

FORMAT: Eng-lega-master-tb-prod-B
REVISION: E1
DATE: 2021/05/01