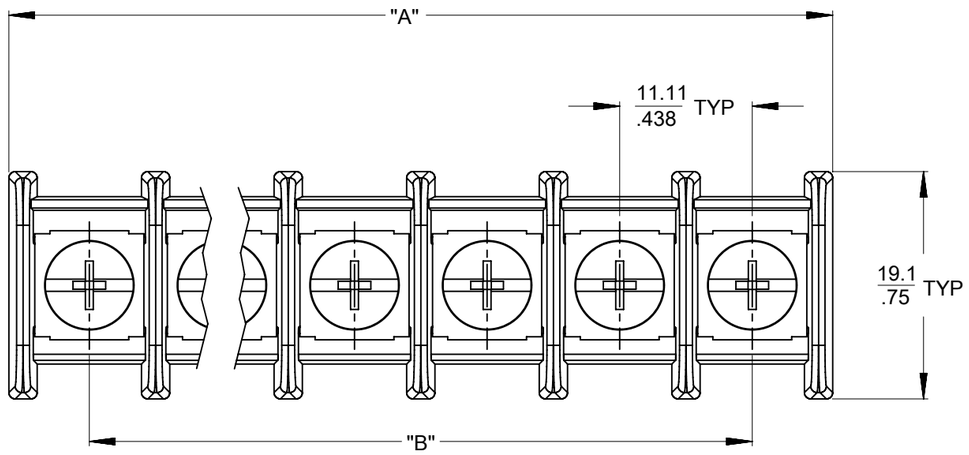

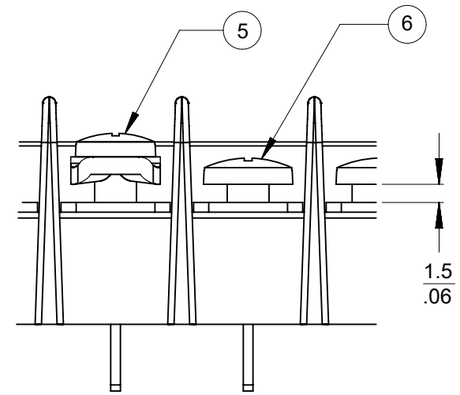

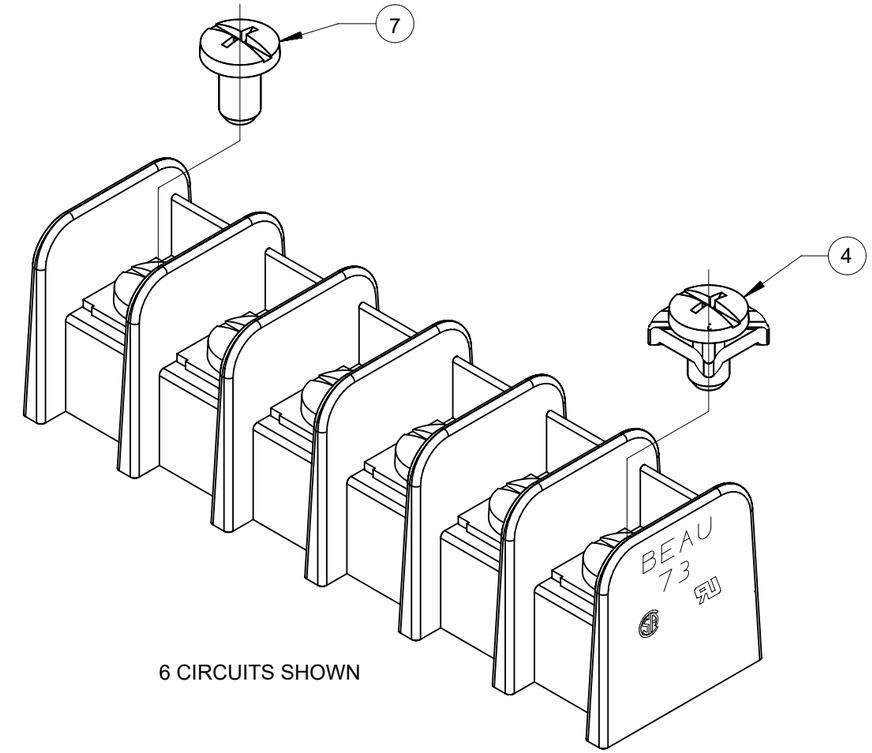

6 CIRCUITS SHOWN

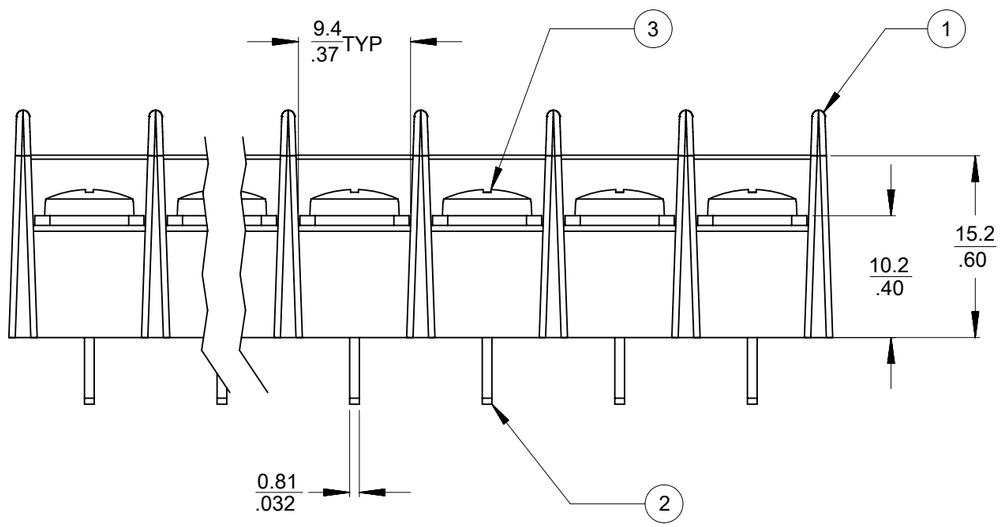

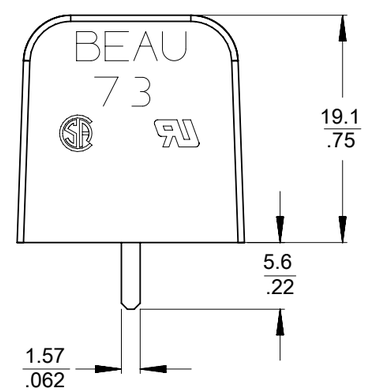

NOTES:

1. MATERIAL: SEE TABLE
2. FINISHES: SEE TABLE
3. PRODUCT SPECIFICATION: NOT REQUIRED
4. "XX" REFERS TO THE NUMBER OF CIRCUITS
5. ROHS COMPLIANT (B)

ITEM	QTY.	DESCRIPTION	MATERIAL	FINISH
7	XX	#6-32 SCREW (OPT -49)	BRASS	NICKEL PLATE
6	XX	#6-32 SCREW WRD (OPT -47)	STEEL	ZN, CLEAR CHROMATE
5	XX	#6-32 SCR W/WASH (OPT -47,-50)	STEEL	ZN, CLEAR CHROMATE
4	XX	#6-32 SCREW W/ WASHER (OPT -50)	STEEL	ZN, CLEAR CHROMATE
3	XX	#6-32 SCREW (STD)	STEEL	ZN, CLEAR CHROMATE
2	XX	#6-32 TERMINAL (STD)	BRASS	TIN PLATE (B)
1	1	INSULATOR	POLYESTER (PBT)	BLACK

DOCUMENT STATUS | P1 | RELEASE DATE | 2024/08/13 06:11:45

THIS DRAWING CONTAINS INFORMATION THAT IS PROPRIETARY TO MOLEX ELECTRONIC TECHNOLOGIES, LLC AND SHOULD NOT BE USED WITHOUT WRITTEN PERMISSION

DIMENSION UNITS	SCALE
mm/IN	2:1

GENERAL TOLERANCES (UNLESS SPECIFIED)

	MM	INCH
4 PLACES	±	±
3 PLACES	±	± 0.005
2 PLACES	± 0.13	± 0.01
1 PLACE	± 0.3	±
0 PLACES	±	±
ANGULAR TOL	± 2.0 °	

DRAFT WHERE APPLICABLE MUST REMAIN WITHIN DIMENSIONS

CURRENT REV DESC: REMOVED OBSOLETED PART NUMBERS AS PER PCN#515181.

EC NO: 793827
DRWN: RAVINR1 2024/06/05
CHK'D: GGA 2024/08/13
APPR: GGA 2024/08/13

INITIAL REVISION:
DRWN: JENCINAS 2010/04/30
APPR: JMACNEIL 2010/05/10

THIRD ANGLE PROJECTION | DRAWING: B-SIZE | SERIES: 38734

molex

11.11MM [.438"] SR BTS
PC, CS, ASSY NO MTG ENDS

PRODUCT CUSTOMER DRAWING

DOCUMENT NUMBER	DOC TYPE	DOC PART	REVISION
SD-38734-002	PSD	001	B2

MATERIAL NUMBER	CUSTOMER	SHEET NUMBER
SEE TABLE	GENERAL MARKET	1 OF 2

FORMAT: Eng-lega-master-tb-prod-B
REVISION: E1
DATE: 2021/05/01

NO. OF CIRCUITS "XX"	DIM. "A"		DIM. "B"		ASSEMBLY MATERIAL NO. (-C STD)	ASSEMBLY MATERIAL NO. (-C-50 OPT)	ASSEMBLY MATERIAL NO. (-C-49 OPT)	ASSEMBLY MATERIAL NO. (-C-47 OPT)	ASSEMBLY MATERIAL NO. (-C-47-50 OPT)
	mm	INCH	mm	INCH					
2	24.6	0.97	11.11	0.438	387344102	387344902	387344502	387345302	387345702
3	35.8	1.41	22.23	0.875	---	387344903	---	---	387345703
4	46.9	1.85	33.34	1.313	---	---	---	387345304	387345704
5	58.0	2.28	44.45	1.750	---	---	387344505	387345305	387345705
6	69.1	2.72	55.56	2.188	---	---	387344506	387345306	387345706
7	80.2	3.16	66.68	2.625	387344107	387344907	387344507	387345307	387345707
8	91.3	3.60	77.79	3.063	387344108	---	387344508	387345308	387345708
9	102.4	4.03	88.90	3.500	---	387344909	387344509	387345309	387345709
10	113.5	4.47	100.01	3.938	387344110	---	387344510	387345310	387345710
11	124.7	4.91	111.13	4.375	387344111	387344911	387344511	387345311	387345711
12	135.8	5.35	122.24	4.813	387344112	---	387344512	387345312	387345712
13	146.9	5.78	133.35	5.250	387344113	---	387344513	387345313	387345713
14	158.0	6.22	144.46	5.688	387344114	---	387344514	387345314	387345714
15	169.1	6.66	155.58	6.125	387344115	387344915	387344515	387345315	387345715
16	180.2	7.10	166.69	6.563	387344116	---	387344516	387345316	387345716
17	191.3	7.53	177.80	7.000	387344117	387344917	387344517	387345317	387345717
18	202.4	7.97	188.91	7.438	387344118	387344918	387344518	387345318	387345718
19	213.6	8.41	200.03	7.875	387344119	387344919	387344519	387345319	387345719
20	224.7	8.85	211.14	8.313	---	---	387344520	387345320	387345720

THIS DRAWING CONTAINS INFORMATION THAT IS PROPRIETARY TO MOLEX ELECTRONIC TECHNOLOGIES, LLC AND SHOULD NOT BE USED WITHOUT WRITTEN PERMISSION

DIMENSION UNITS	SCALE
mm/IN	2:1

GENERAL TOLERANCES (UNLESS SPECIFIED)

	MM	INCH
4 PLACES	±	±
3 PLACES	±	± 0.005
2 PLACES	± 0.13	± 0.01
1 PLACE	± 0.3	±
0 PLACES	±	±
ANGULAR TOL	± 2.0 °	

DRAFT WHERE APPLICABLE MUST REMAIN WITHIN DIMENSIONS

CURRENT REV DESC: REMOVED OBSOLETED PART NUMBERS AS PER PCN#515181.

EC NO: 793827
DRWN: RAVINR1 2024/06/05
CHK'D: GGA 2024/08/13
APPR: GGA 2024/08/13

INITIAL REVISION:
DRWN: JENCINAS 2010/04/30
APPR: JMACNEIL 2010/05/10

THIRD ANGLE PROJECTION | DRAWING: B-SIZE | SERIES: 38734

molex

11.11MM [.438"] SR BTS
PC, CS, ASSY NO MTG ENDS

PRODUCT CUSTOMER DRAWING

DOCUMENT NUMBER	DOC TYPE	DOC PART	REVISION
SD-38734-002	PSD	001	B2

MATERIAL NUMBER	CUSTOMER	SHEET NUMBER
SEE TABLE	GENERAL MARKET	2 OF 2

DOCUMENT STATUS	P1	RELEASE DATE	2024/08/13 06:11:45

FORMAT: Eng-lega-master-tb-prod-B
REVISION: E1
DATE: 2021/05/01