© – TE Connectivity. All Rights Reserved.

REVISIONS					
P	LTR	DESCRIPTION	DATE	DWN	APVD
	A3	PART STATUS CHANGE TO DISCONTINUNACE	26JUN2026	NS	PS

1. MATERIAL:
   HOUSING: POLYAMIDE 6 UL94V–2.
   COLOR: NATURAL (OFF WHITE).
   TUBULAR CONTACT: BRASS, TIN PLATED.
   SCREW: SEE TABLE
   WIRE PROTECTOR: STAINLESS STEEL

2. ELECTRICAL:
   CURRENT RATING: 65A, 600V.
   WIRE RANGE: 6–14 UL AND 6–22 AWG FOR (CSA)

3. CONTINUOUS WORKING TEMP.: 100°C MAX.

4. CUTTING PROJECTION CAN BE ON BOTH SIDES DEPENDING ON CUTTING LOCATION.

5. CUTTING BURR MAX. 1mm ALLOWED.

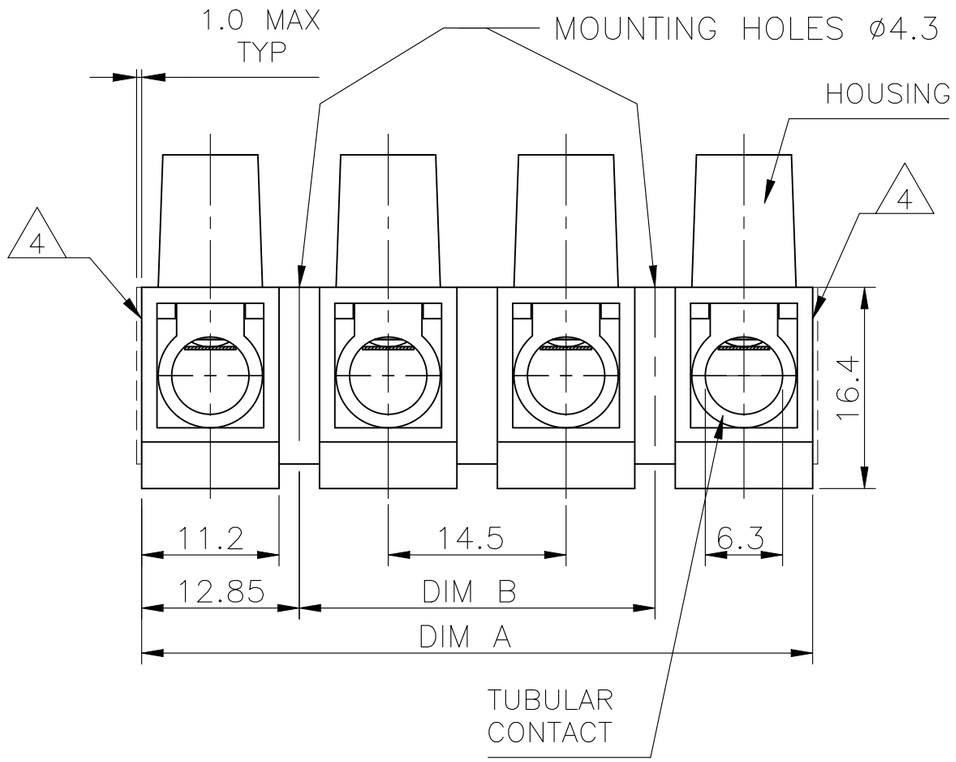

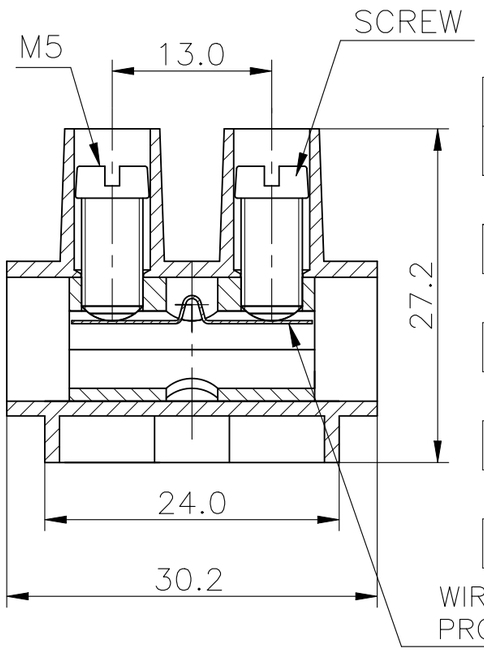

1776315–4 AS SHOWN

SUPERSEDED BY 1776315–3	NICKEL PLATED BRASS	14.5	40.2	TSB200003KDS	2–1776315–3
OBSOLETE	NICKEL PLATED BRASS	–	25.7	TSB200002KDS	2–1776315–2
	TRIVALENT ZINC PLATED STEEL	145.0	170.7	TSB200012KDS	1–1776315–2
OBSOLETE	TRIVALENT ZINC PLATED STEEL	130.5	156.2	TSB200011KDS	1–1776315–1
	TRIVALENT ZINC PLATED STEEL	116.0	141.7	TSB200010KDS	1–1776315–0
OBSOLETE	TRIVALENT ZINC PLATED STEEL	101.5	127.2	TSB200009KDS	1776315–9
	TRIVALENT ZINC PLATED STEEL	87.0	112.7	TSB200008KDS	1776315–8
OBSOLETE	TRIVALENT ZINC PLATED STEEL	72.5	98.2	TSB200007KDS	1776315–7
	TRIVALENT ZINC PLATED STEEL	58.0	83.7	TSB200006KDS	1776315–6
OBSOLETE	TRIVALENT ZINC PLATED STEEL	43.5	69.2	TSB200005KDS	1776315–5
	TRIVALENT ZINC PLATED STEEL	29.0	54.7	TSB200004KDS	1776315–4
	TRIVALENT ZINC PLATED STEEL	14.5	40.2	TSB200003KDS	1776315–3
OBSOLETE	TRIVALENT ZINC PLATED STEEL	–	25.7	TSB200002KDS	1776315–2
OBSOLETE	TRIVALENT ZINC PLATED STEEL	–	11.2	TSB200001KDS	1776315–1
	SCREW MATERIAL	DIM B	DIM A	T & B PART NUMBER	TE PART NUMBER

THIS DRAWING IS A CONTROLLED DOCUMENT.

DIMENSIONS: mm

TOLERANCES UNLESS OTHERWISE SPECIFIED:

0 PLC	± –
1 PLC	± 0.3
2 PLC	± 0.25
3 PLC	± –
4 PLC	± –
ANGLES	± 2°

MATERIAL: SEE NOTES

FINISH: SEE NOTES

DWN S SCHLEGEL 3/21/05
CHK C RICHARD 3/21/05
APVD C RICHARD 3/21/05
PRODUCT SPEC —
APPLICATION SPEC —
WEIGHT —

TE Connectivity

NAME: 14.5MM PITCH WIRE PROTECTOR 65A HIGH VOLTAGE VERSION —

SIZE	CAGE CODE	DRAWING NO	RESTRICTED TO
A3	00779	C–1776315	—

CUSTOMER DRAWING | SCALE NTS | SHEET 1 OF 1 | REV A3