THIS DRAWING IS UNPUBLISHED. RELEASED FOR PUBLICATION -,- .
© COPYRIGHT - By - ALL RIGHTS RESERVED.

LOC	DIST
FT	0

REVISIONS

P	LTR	DESCRIPTION	DATE	DWN	APVD
	B1	OBSOLETING PART NUMBERS 15 POSITION AND ABOVE	09APR2015	CR	PS

MATERIALS:
HOUSING: THERMOPLASTIC PA, UL94V-0, BLACK.
TERMINALS: BRIGHT TIN PLATED, COPPER ALLOY.
SCREWS: 6-32, STEEL, ZINC PLATED W/ CLEAR CHROMATE.

ELECTRICAL:
UL CLASS C: 20A, 150V.
UL CLASS D: 10A, 300V.
CSA TYPE B: 20A, 300V.
CSA TYPE C: 20A, 300V.
CSA TYPE D: 10A, 300V.
CSA TYPE E: 20A, 300V.
WIRE RANGE: 12-22 AWG

MECHANICAL:
OPERATING TEMP.: -40° TO +105°C
RECOMMENDED TIGHTENING TORQUE: 7 IN-LBS.

△1 OBSOLETE PARTS.

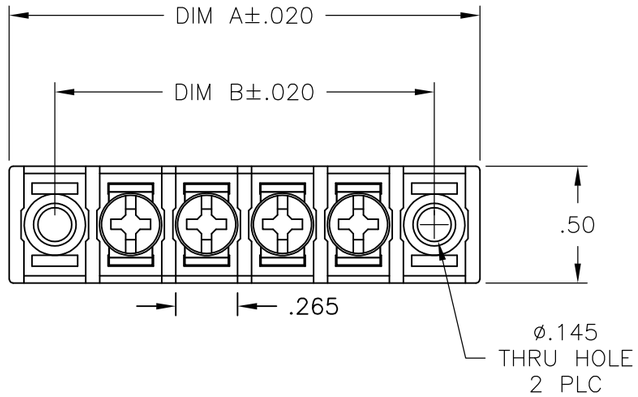

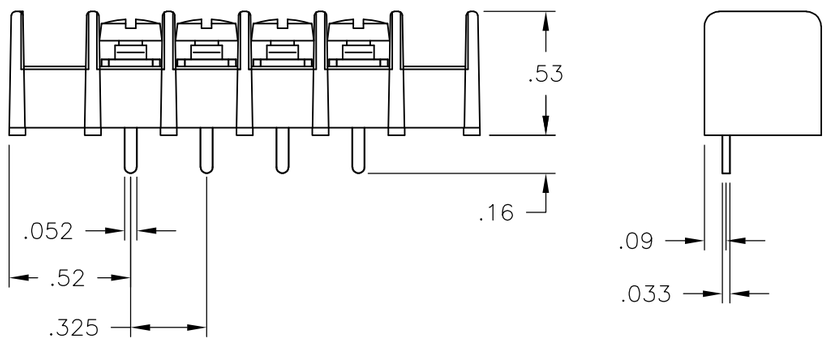

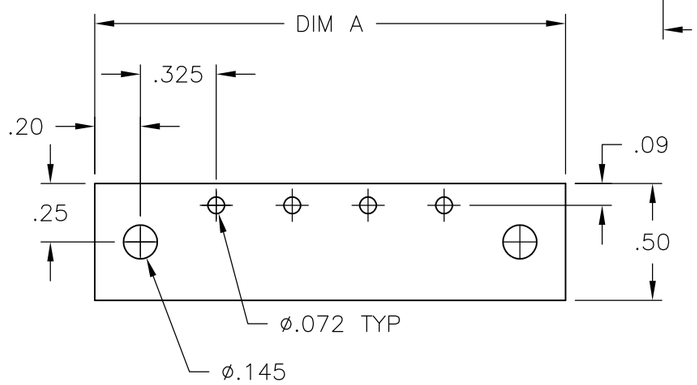

RECOMMENDED PCB LAYOUT

	DIM B	DIM A	NO OF POS	CATALOG NUMBER	TE PART NO.
△1	9.425	9.815	28	4DB-P207-28	~~2-1546465-8~~
△1	9.100	9.490	27	4DB-P207-27	~~2-1546465-7~~
△1	8.775	9.165	26	4DB-P207-26	~~2-1546465-6~~
△1	8.450	8.840	25	4DB-P207-25	~~2-1546465-5~~
△1	8.125	8.515	24	4DB-P207-24	~~2-1546465-4~~
△1	7.800	8.190	23	4DB-P207-23	~~2-1546465-3~~
△1	7.475	7.865	22	4DB-P207-22	~~2-1546465-2~~
△1	7.150	7.540	21	4DB-P207-21	~~2-1546465-1~~
△1	6.825	7.215	20	4DB-P207-20	~~2-1546465-0~~
△1	6.500	6.890	19	4DB-P207-19	~~1-1546465-9~~
△1	6.175	6.565	18	4DB-P207-18	~~1-1546465-8~~
△1	5.850	6.240	17	4DB-P207-17	~~1-1546465-7~~
△1	5.525	5.915	16	4DB-P207-16	~~1-1546465-6~~
△1	5.200	5.590	15	4DB-P207-15	~~1-1546465-5~~
	4.875	5.265	14	4DB-P207-14	1-796658-0
	4.550	4.940	13	4DB-P207-13	1-1546465-3
	4.225	4.615	12	4DB-P207-12	1-1546465-2
	3.900	4.290	11	4DB-P207-11	1-1546465-1
	3.575	3.965	10	4DB-P207-10	1-1546465-0
	3.250	3.640	9	4DB-P207-09	1546465-9
	2.925	3.315	8	4DB-P207-08	1546465-8
	2.600	2.990	7	4DB-P207-07	1546465-7
	2.275	2.665	6	4DB-P207-06	5-1437667-9
	1.950	2.340	5	4DB-P207-05	5-1437667-8
	1.625	2.015	4	4DB-P207-04	5-1437667-7
	1.300	1.690	3	4DB-P207-03	5-1437667-6
	.975	1.365	2	4DB-P207-02	1546465-2

THIS DRAWING IS A CONTROLLED DOCUMENT.

DIMENSIONS: INCHES

TOLERANCES UNLESS OTHERWISE SPECIFIED:
0 PLC ± -
1 PLC ± -
2 PLC ± .01
3 PLC ± .005
4 PLC ± -
ANGLES ± 2°

MATERIAL -
FINISH -

DWN S SCHLEGEL 10/20/06
CHK S YODER 10/20/06
APVD S YODER 10/20/06
PRODUCT SPEC —
APPLICATION SPEC —
WEIGHT —

TE Connectivity

NAME 4DB SERIES P207 STYLE —

SIZE	CAGE CODE	DRAWING NO	RESTRICTED TO
A3	00779	C-5-1437667-6	—

CUSTOMER DRAWING

SCALE	SHEET	REV
NTS	1 OF 1	B1