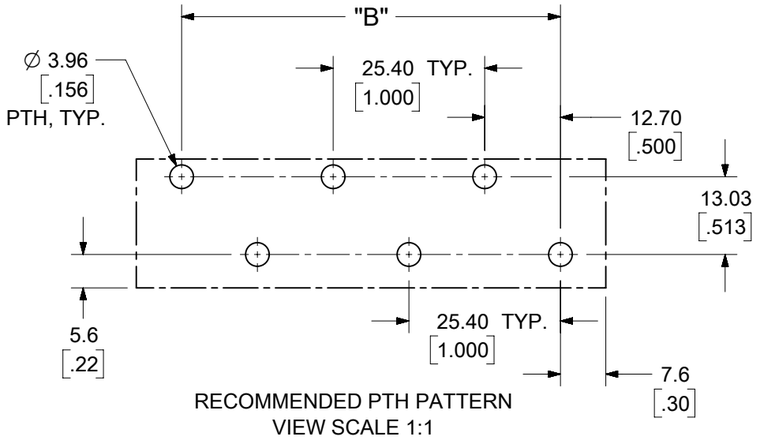

RECOMMENDED PTH PATTERN
VIEW SCALE 1:1

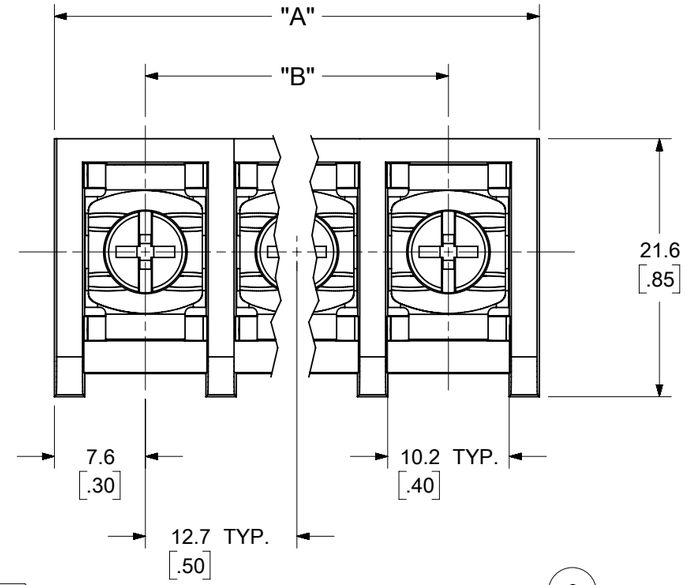

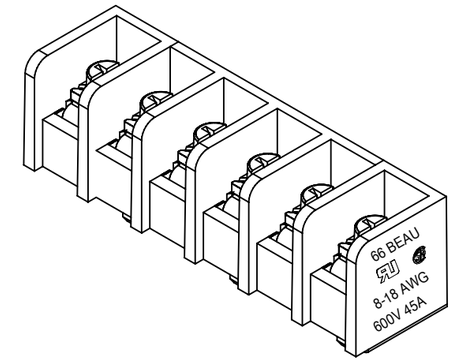

6 CIRCUIT
SHOWN ACTUAL SIZE

MATERIAL NUMBER (STD PART)	NUMBER OF CIRCUITS "XX"	DIM. "A"		DIM. "B"	
		mm	IN	mm	IN
386608802	02	27.9	1.10	12.70	.500
386608803	03	40.6	1.60	25.40	1.000
386608804	04	53.3	2.10	38.10	1.500
386608805	05	66.0	2.60	50.80	2.000
386608806	06	78.7	3.10	63.50	2.500
386608807	07	91.4	3.60	76.20	3.000
386608808	08	104.1	4.10	88.90	3.500
386608809	09	116.8	4.60	101.60	4.000
386608810	10	129.5	5.10	114.30	4.500
386608811	11	142.2	5.60	127.00	5.000
386608812	12	154.9	6.10	139.70	5.500
386608813	13	167.6	6.60	152.40	6.000
386608814	14	180.3	7.10	165.10	6.500
386608815	15	193.0	7.60	177.80	7.000

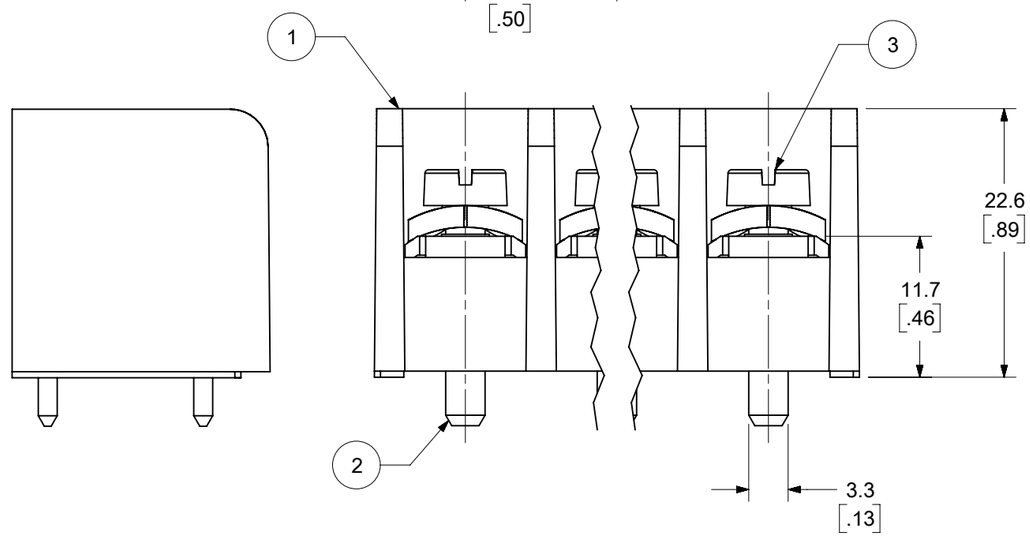

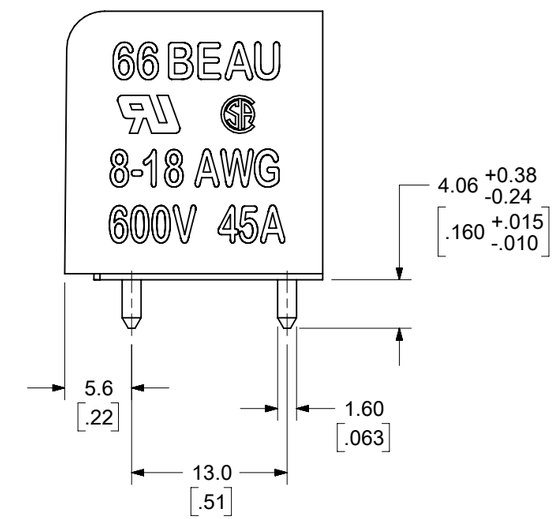

NOTES:
1. MATERIAL: SEE TABLE
2. FINISHES: SEE TABLE
3. ELECTRICAL RATINGS:
   (A). MAXIMUM VOLTAGE: 600V
   (B). MAXIMUM CURRENT: 45A
   (C). INSULATION RESISTANCE: >5000 MΩ
   (D). DIELECTRIC WITHSTAND VOLTAGE: 12000V AC
4. WIRE RANGE: 8 TO 18 AWG (SOLID OR STRANDED COPPER)
5. SCREW TORQUE: 16 LBF. IN. (1.8Nm)
6. OPERATING TEMPERATURE: -40°C TO +120°C

ITEM	QTY	DESCRIPTION	MATERIAL	FINISH
3	XX	SCREW	STEEL	ZN/YELLOW CHROMATE
2	XX	TERMINAL	RED BRASS	TIN OVER COPPER
1	1	INSULATOR	POLYESTER (PBT)	BLACK

DOCUMENT STATUS | P1 | RELEASE DATE | 2020/03/09 17:51:50

THIS DRAWING CONTAINS INFORMATION THAT IS PROPRIETARY TO MOLEX ELECTRONIC TECHNOLOGIES, LLC AND SHOULD NOT BE USED WITHOUT WRITTEN PERMISSION

SYMBOLS: E = 0, F = 0, P = 0, S = 0, ▼ = 0, C = 0, ☒ = 0, ■ = 0, V = 0

DIMENSION UNITS: MM/INCH
SCALE: 2:1

GENERAL TOLERANCES (UNLESS SPECIFIED)

	MM	INCH
4 PLACES	± ---	± ---
3 PLACES	± ---	± .005
2 PLACES	± 0.13	± .01
1 PLACE	± 0.3	± ---
0 PLACES	± ---	± ---
ANGULAR TOL	± 2°	

DRAFT WHERE APPLICABLE MUST REMAIN WITHIN DIMENSIONS

CURRENT REV DESC: UPDATED NOTES SECTION

EC NO: 632901
DRWN: ABENJAMINLW 2020/01/14
CHK'D: DACHAMMER 2020/02/25
APPR: JFMURPHY 2020/03/09

INITIAL REVISION:
DRWN: CLYORK 2008/09/22
APPR: RDEROSS 2008/09/23

THIRD ANGLE PROJECTION | DRAWING: B-SIZE | SERIES: 38660

molex

SR BTS, 12.70/.500 PITCH
PC, NO MTG ASSY, ROHS COMPLIANT

PRODUCT CUSTOMER DRAWING

DOCUMENT NUMBER	DOC TYPE	DOC PART	REVISION
SD-38660-003	PSD	001	B

MATERIAL NUMBER	CUSTOMER	SHEET NUMBER
SEE CHART	GENERAL MARKET	1 OF 1

FORMAT: Eng-legal-portrait-prod-B
REVISION: D
DATE: 2018/01/18