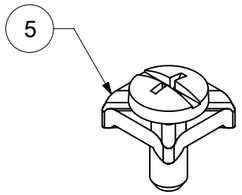

REF. -50 OPT. SCREW
(WHERE APPLICABLE)

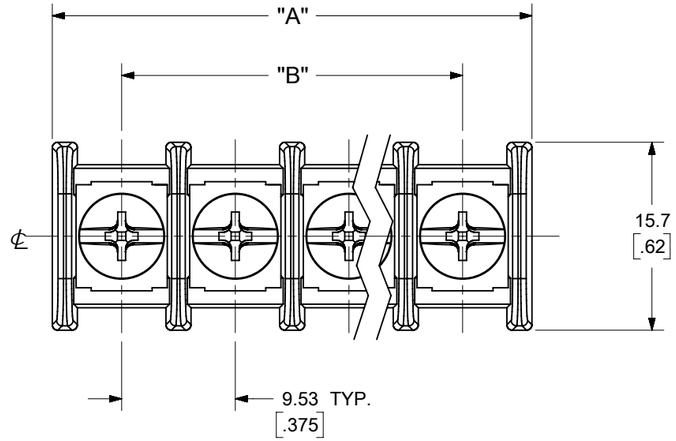

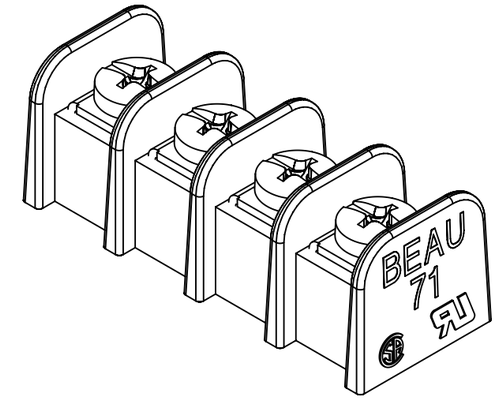

4 CIRCUIT SHOWN

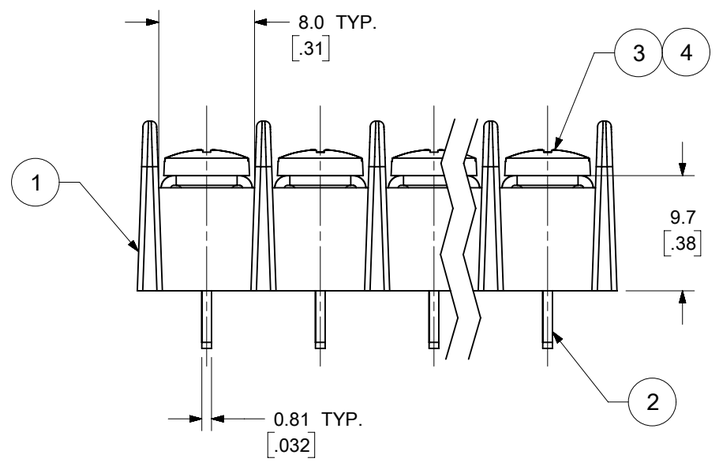

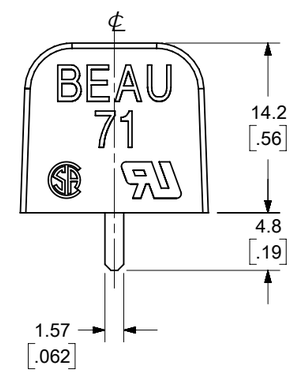

NOTES:

1. MATERIAL: SEE TABLE
2. FINISH: SEE TABLE
3. INCH DIMS ARE SHOWN IN BRACKETS [XXX].
4. "XX" REFERS TO THE NUMBER OF CIRCUITS.
5. ALL COMPONENTS ARE ROHS COMPLIANT.

TOLERANCES			
MM	TOL	INCH	TOL
0-6	±0.25	0-.24	±.010
>6-30	±0.40	.24-1.18	±.016
>30-120	±0.50	1.18-4.76	±.020
>120	±0.80	>4.76	±.031

ITEM	QTY.	DESCRIPTION	MATERIAL	FINISH
5	XX	SCREW&WASHER, #6-32X.250, PAN, PH/SL (-50 OPT)	STEEL	ZN, CLEAR CHROMATE
4	XX	SCREW, #6-32X.250, BHD, PH/SL (-49 OPT)	BRASS	NICKEL PLATE
3	XX	SCREW, #6-32X.250, BHD, PH/SL (STD)	STEEL	ZN, CLEAR CHROMATE
2	XX	TERMINAL, PC, #6-32	BRASS	TIN PLATE
1	1	INSULATOR, SR, NO MTG.	30% G.F. PBT	BLACK

DOCUMENT STATUS	P1	RELEASE DATE	2019/12/02 17:26:01

SYMBOLS: = 0 (4 PLACES), = 0 (3 PLACES), = 0 (2 PLACES), = 0 (1 PLACE), = 0 (0 PLACES), = 0, = 0, = 0

DIMENSION UNITS: MM/INCH — SCALE: 2:1

GENERAL TOLERANCES (UNLESS SPECIFIED)

	MM	INCH
4 PLACES	± ---	± ---
3 PLACES	± ---	± SEE CHART
2 PLACES	± SEE CHART	± SEE CHART
1 PLACE	± SEE CHART	± ---
0 PLACES	± ---	± ---
ANGULAR TOL	± ---	

DRAFT WHERE APPLICABLE MUST REMAIN WITHIN DIMENSIONS

THIS DRAWING CONTAINS INFORMATION THAT IS PROPRIETARY TO MOLEX ELECTRONIC TECHNOLOGIES, LLC AND SHOULD NOT BE USED WITHOUT WRITTEN PERMISSION

CURRENT REV DESC: ADDED TOLERANCE TABLE

EC NO: 626833
DRWN: ABENJAMINLW 2019/11/05
CHK'D: DACHAMMER 2019/11/05
APPR: JFMURPHY 2019/12/02

INITIAL REVISION:
DRWN: CYORK 2006/07/12
APPR: RDEROSS 2006/07/13

THIRD ANGLE PROJECTION — DRAWING: B-SIZE — SERIES: 38710

molex

9.53MM [.375"] SR BTS
ASSY, PC TERM. WITHOUT MTG. ENDS, LOW PROF.

PRODUCT CUSTOMER DRAWING

DOCUMENT NUMBER	DOC TYPE	DOC PART	REVISION
SD-38710-005	PSD	001	B

MATERIAL NUMBER	CUSTOMER	SHEET NUMBER
SEE SHEET-2	GENERAL MARKET	1 OF 2

FORMAT: Eng-legal-portrait-prod-B
REVISION: D
DATE: 2018/01/18

NO. OF CIRCUITS	DIM. "A"		DIM. "B"		ASSEMBLY MATERIAL NO. (STANDARD)	ASSEMBLY MATERIAL NO. (-49 OPT)	ASSEMBLY MATERIAL NO. (-50 OPT)
	mm	INCH	mm	INCH			
02	21.1	.83	9.53	.375	387106302	387106902	387107502
03	30.7	1.21	19.05	.750	387106303	387106903	387107503
04	40.2	1.58	28.58	1.125	387106304	387106904	387107504
05	49.7	1.96	38.10	1.500	387106305	387106905	387107505
06	59.2	2.33	47.63	1.875	387106306	387106906	387107506
07	68.8	2.71	57.15	2.250	387106307	387106907	387107507
08	78.3	3.08	66.68	2.625	387106308	387106908	387107508
09	87.8	3.46	76.20	3.000	387106309	387106909	387107509
10	97.3	3.83	85.73	3.375	387106310	387106910	387107510
11	106.9	4.21	95.25	3.750	387106311	387106911	387107511
12	116.4	4.58	104.78	4.125	387106312	387106912	387107512
13	125.9	4.96	114.30	4.500	387106313	387106913	387107513
14	135.4	5.33	123.83	4.875	387106314	387106914	387107514
15	145.0	5.71	133.35	5.250	387106315	387106915	387107515
16	154.5	6.08	142.88	5.625	387106316	387106916	387107516
17	164.0	6.46	152.40	6.000	387106317	387106917	387107517
18	173.5	6.83	161.93	6.375	387106318	387106918	387107518
19	183.1	7.21	171.45	6.750	387106319	387106919	387107519
20	192.6	7.58	180.98	7.125	387106320	387106920	387107520
21	202.1	7.96	190.50	7.500	387106321	387106921	387107521
22	211.6	8.33	200.03	7.875	387106322	387106922	387107522
23	221.2	8.71	209.55	8.250	387106323	387106923	387107523
24	230.7	9.08	219.08	8.625	387106324	387106924	387107524
25	240.2	9.46	228.60	9.000	387106325	387106925	387107525
26	249.7	9.83	238.13	9.375	387106326	387106926	387107526

TOLERANCES			
MM	TOL	INCH	TOL
0-6	±0.25	0-.24	±.010
>6-30	±0.40	.24-1.18	±.016
>30-120	±0.50	1.18-4.76	±.020
>120	±0.80	>4.76	±.031

SYMBOLS
E = 0
E = 0
D = 0
S = 0
▼ = 0
C = 0
☒ = 0
■ = 0
▽ = 0

THIS DRAWING CONTAINS INFORMATION THAT IS PROPRIETARY TO MOLEX ELECTRONIC TECHNOLOGIES, LLC AND SHOULD NOT BE USED WITHOUT WRITTEN PERMISSION

DIMENSION UNITS: MM/INCH
SCALE: 2:1

GENERAL TOLERANCES (UNLESS SPECIFIED)

	MM	INCH
4 PLACES	± ---	± ---
3 PLACES	± ---	± SEE CHART
2 PLACES	± SEE CHART	± SEE CHART
1 PLACE	± SEE CHART	± ---
0 PLACES	± ---	± ---
ANGULAR TOL	± ---	

DRAFT WHERE APPLICABLE MUST REMAIN WITHIN DIMENSIONS

CURRENT REV DESC: ADDED TOLERANCE TABLE

EC NO: 626833
DRWN: ABENJAMINLW 2019/11/05
CHK'D: DACHAMMER 2019/11/05
APPR: JFMURPHY 2019/12/02

INITIAL REVISION:
DRWN: CYORK 2006/07/12
APPR: RDEROSS 2006/07/13

THIRD ANGLE PROJECTION

DRAWING: B-SIZE
SERIES: 38710

molex

9.53MM [.375"] SR BTS
ASSY, PC TERM. WITHOUT MTG. ENDS, LOW PROF.

PRODUCT CUSTOMER DRAWING

DOCUMENT NUMBER	DOC TYPE	DOC PART	REVISION
SD-38710-005	PSD	001	B

MATERIAL NUMBER	CUSTOMER	SHEET NUMBER
SEE CHART	GENERAL MARKET	2 OF 2

DOCUMENT STATUS	P1	RELEASE DATE	2019/12/02 17:26:01

FORMAT: Eng-lega-master-tb-prod-B
REVISION: D
DATE: 2018/01/18