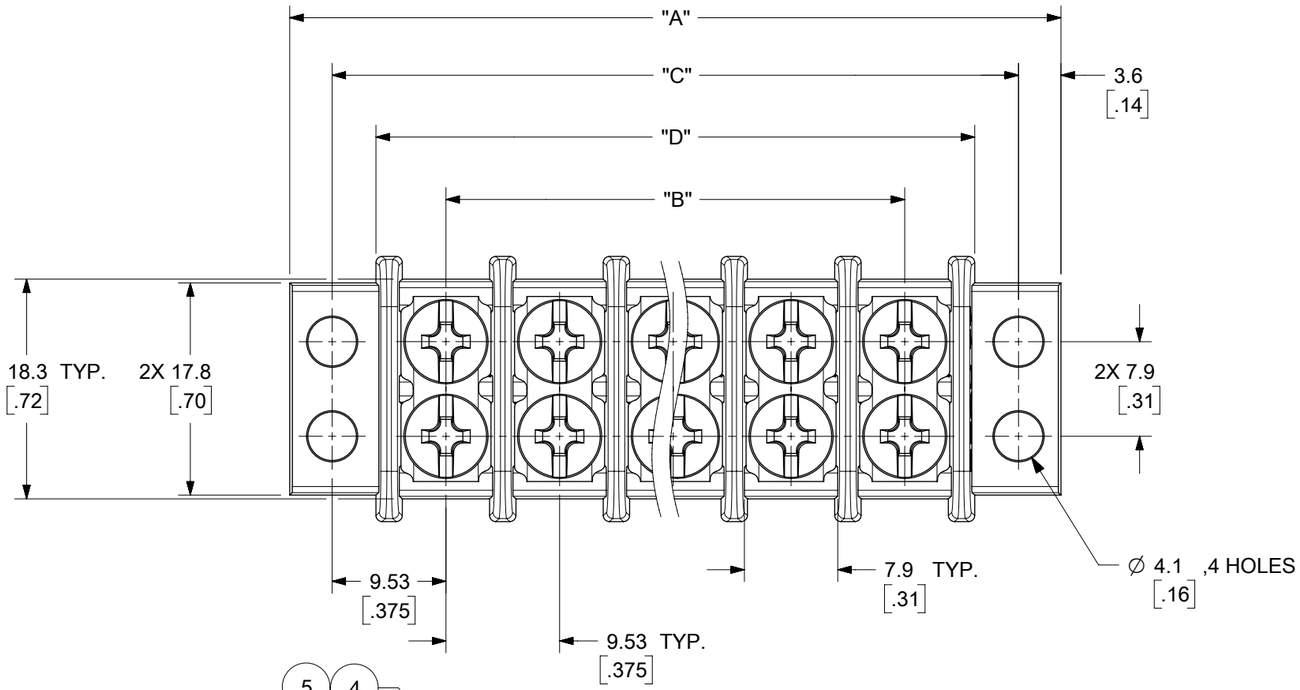

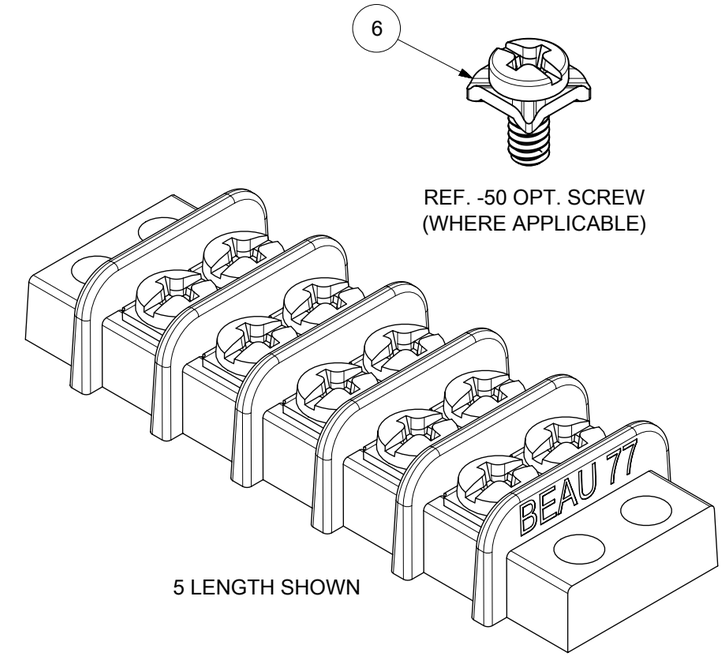

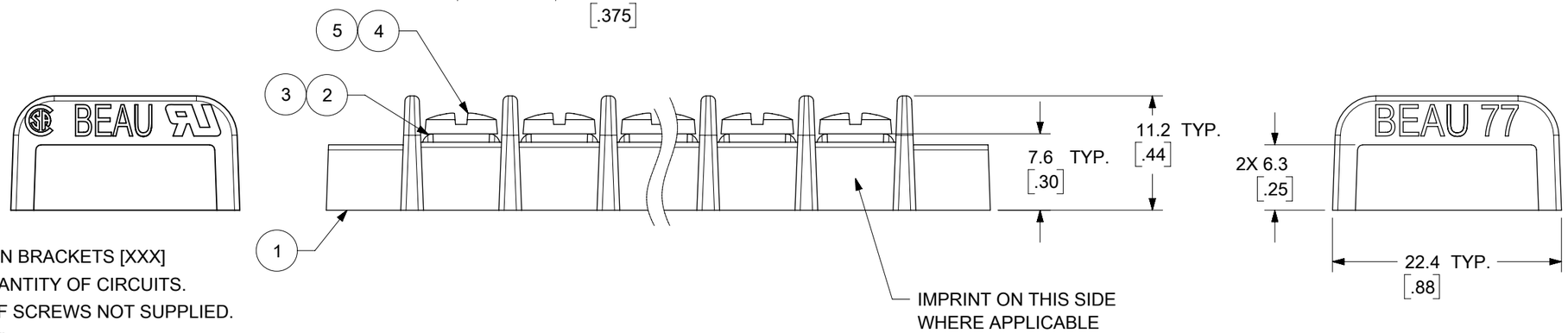

NOTES:

1. MATERIAL: SEE TABLE.
2. FINISHES: SEE TABLE.
3. INCH DIMS ARE SHOWN IN BRACKETS [XXX]
4. "XX" REFERS TO THE QUANTITY OF CIRCUITS.
5. -61 OPTION: ONE ROW OF SCREWS NOT SUPPLIED. SCREW QUANTITY = "XX".
6. -49 OPTION: USE ITEM 3 TERMINAL PLATE, ALL OTHERS USE ITEM 2.
7. -58 OPTION: NO SCREWS SUPPLIED.
8. FOR IMPRINTING (-10A OPTION) SEE SD-38120-001.
9. ALL COMPONENTS ARE ROHS COMPLIANT.

TOLERANCES			
MM	TOL	INCH	TOL
0-6	±0.25	0-.24	±.010
>6-30	±0.40	.24-1.18	±.016
>30-120	±0.50	1.18-4.76	±.020
>120	±0.80	>4.76	±.031

ITEM	QTY.	DESCRIPTION	MATERIAL	FINISH
6	XX*2	SCREW&WASHER, #6-32X.250, PAN, PHIL-SLOT (-50)	STEEL	ZINC W/CHROMATE
5	XX*2	SCREW, #6-32X.250, BHD, PHIL-SLOT (-49)	BRASS	NICKEL PLATE
4	XX*2	SCREW, #6-32X.250, BHD, PHIL-SLOT (STD &-61)	STEEL	ZINC W/CHROMATE
3	XX	TERMINAL PLATE, TIN PLATED (SEE NOTE 6)	BRASS	TIN PLATE
2	XX	TERMINAL PLATE, NICKEL PLATED	BRASS	NICKEL PLATE
1	1	INSULATOR	PBT	BLACK

DOCUMENT STATUS	P1	RELEASE DATE	2023/03/08 16:05:23

FUNCTIONAL SYMBOLS: EA = 0, EC = 0, EP = 0

DIVISIONAL SYMBOLS

THIS DRAWING CONTAINS INFORMATION THAT IS PROPRIETARY TO MOLEX ELECTRONIC TECHNOLOGIES, LLC AND SHOULD NOT BE USED WITHOUT WRITTEN PERMISSION

DIMENSION UNITS: MM/INCH
SCALE: 2:1

GENERAL TOLERANCES (UNLESS SPECIFIED)

	MM	INCH
4 PLACES	± ---	± ---
3 PLACES	± ---	± SEE CHART
2 PLACES	± SEE CHART	± SEE CHART
1 PLACE	± SEE CHART	± ---
0 PLACES	± ---	± ---
ANGULAR TOL	± ---	

DRAFT WHERE APPLICABLE MUST REMAIN WITHIN DIMENSIONS

CURRENT REV DESC: MIGRATED TO ECTR/NX. ADDED THE OPPOSITE END PRODUCT VIEW WITH GRAPHICS.REMOVED OBSOLETED PNS AS PER PCN #512245

EC NO: 741427
DRWN: ABENJAMINLW 2021/07/23
CHK'D: DACHAMMER 2023/03/07
APPR: JFMURPHY 2023/03/08

INITIAL REVISION:
DRWN: CYORK 2006/08/30
APPR: JMACNEIL 2006/08/31

THIRD ANGLE PROJECTION

DRAWING: B-SIZE
SERIES: 38770

molex

9.53 [.375] DOUBLE ROW
LOW PROFILE BTS ASSY

PRODUCT CUSTOMER DRAWING

DOCUMENT NUMBER	DOC TYPE	DOC PART	REVISION
SD-38770-004	PSD	001	B2

MATERIAL NUMBER	CUSTOMER	SHEET NUMBER
SEE SHEET-2	GENERAL MARKET	1 OF 2

NO. OF CIRCUITS "XX"	DIM. "A" mm	DIM. "A" INCH	DIM. "B" mm	DIM. "B" INCH	DIM. "C" mm	DIM. "C" INCH	DIM. "D" mm	DIM. "D" INCH	ASSEMBLY MATERIAL NO. (STANDARD)	ASSEMBLY MATERIAL NO. (-49 OPTION)	ASSEMBLY MATERIAL NO. (-50 OPTION)	ASSEMBLY MATERIAL NO. (-58 OPTION)	ASSEMBLY MATERIAL NO. (-10A OPTION)	ASSEMBLY MATERIAL NO. (-61 OPTION)
2	35.7	[1.41]	9.53	[.375]	28.58	[1.125]	21.3	[.84]	387700102	387700202	387700302	387700402	---	---
3	45.2	[1.78]	19.05	[.750]	38.10	[1.500]	30.8	[1.21]	387700103	387700203	387700303	387700403	387700503	387700603
4	54.7	[2.16]	28.58	[1.125]	47.63	[1.875]	40.3	[1.59]	387700104	---	387700304	387700404	387700504	---
5	64.3	[2.53]	38.10	[1.500]	57.15	[2.250]	49.8	[1.96]	387700105	387700205	387700305	387700405	387700505	---
6	73.8	[2.91]	47.63	[1.875]	66.68	[2.625]	59.4	[2.34]	387700106	387700206	387700306	387700406	387700506	---
7	83.3	[3.28]	57.15	[2.250]	76.20	[3.000]	68.9	[2.71]	387700107	387700207	387700307	387700407	---	---
8	92.8	[3.66]	66.68	[2.625]	85.73	[3.375]	78.4	[3.09]	387700108	---	387700308	387700408	387700508	387700608
9	102.4	[4.03]	76.20	[3.000]	95.25	[3.750]	87.9	[3.46]	387700109	387700209	387700309	387700409	---	387700609
10	111.9	[4.41]	85.73	[3.375]	104.78	[4.125]	97.5	[3.84]	387700110	---	387700310	---	---	---
11	121.4	[4.78]	95.25	[3.750]	114.30	[4.500]	107.0	[4.21]	387700111	---	---	387700411	387700511	387700611
12	130.9	[5.16]	104.78	[4.125]	123.83	[4.875]	116.5	[4.59]	387700112	387700212	387700312	387700412	---	387700612
13	140.5	[5.53]	114.30	[4.500]	133.35	[5.250]	126.0	[4.96]	387700113	---	---	387700413	387700513	387700613
14	150.0	[5.91]	123.83	[4.875]	142.88	[5.625]	135.6	[5.34]	387700114	---	387700314	387700414	---	387700614
15	159.5	[6.28]	133.35	[5.250]	152.40	[6.000]	145.1	[5.71]	387700115	---	---	---	387700515	387700615
16	169.0	[6.66]	142.88	[5.625]	161.93	[6.375]	154.6	[6.09]	387700116	---	387700316	---	---	387700616
17	178.6	[7.03]	152.40	[6.000]	171.45	[6.750]	164.1	[6.46]	---	---	---	---	387700517	387700617
18	188.1	[7.41]	161.93	[6.375]	180.98	[7.125]	173.7	[6.84]	387700118	---	---	---	---	387700618
19	197.6	[7.78]	171.45	[6.750]	190.50	[7.500]	183.2	[7.21]	---	---	---	---	387700519	387700619
20	207.1	[8.16]	180.98	[7.125]	200.03	[7.875]	192.7	[7.59]	387700120	---	387700320	---	---	387700620
21	216.7	[8.53]	190.50	[7.500]	209.55	[8.250]	202.2	[7.96]	---	---	---	---	387700521	387700621
22	226.2	[8.91]	200.03	[7.875]	219.08	[8.625]	211.8	[8.34]	387700122	---	---	---	387700522	387700622
23	235.7	[9.28]	209.55	[8.250]	228.60	[9.000]	221.3	[8.71]	---	---	---	---	387700523	387700623
24	245.2	[9.66]	219.08	[8.625]	238.13	[9.375]	230.8	[9.09]	387700124	---	---	---	387700524	387700624
25	254.2	[10.03]	228.60	[9.000]	247.65	[9.750]	240.3	[9.46]	---	---	---	---	387700525	387700625
26	264.3	[10.41]	238.13	[9.375]	257.18	[10.125]	249.9	[9.84]	---	---	---	---	387700526	387700626
27	273.8	[10.78]	247.65	[9.750]	266.70	[10.500]	259.4	[10.21]	---	---	---	---	387700527	387700627
28	283.3	[11.16]	257.18	[10.125]	276.23	[10.875]	268.9	[10.59]	---	---	---	---	---	387700628
29	292.9	[11.53]	266.70	[10.500]	285.75	[11.250]	278.4	[10.96]	---	---	---	---	387700529	387700629
30	302.4	[11.91]	276.23	[10.875]	295.28	[11.625]	288.0	[11.34]	387700130	---	387700330	---	---	387700630

TOLERANCES			
MM	TOL	INCH	TOL
0-6	±0.25	0-.24	±.010
>6-30	±0.40	.24-1.18	±.016
>30-120	±0.50	1.18-4.76	±.020
>120	±0.80	>4.76	±.031

FUNCTIONAL SYMBOLS: E/A = 0; E/C = 0; E/P = 0

DIVISIONAL SYMBOLS

THIS DRAWING CONTAINS INFORMATION THAT IS PROPRIETARY TO MOLEX ELECTRONIC TECHNOLOGIES, LLC AND SHOULD NOT BE USED WITHOUT WRITTEN PERMISSION

DIMENSION UNITS: MM/INCH
SCALE: 2:1

GENERAL TOLERANCES (UNLESS SPECIFIED)

	MM	INCH
4 PLACES	± ---	± ---
3 PLACES	± ---	± SEE CHART
2 PLACES	± SEE CHART	± SEE CHART
1 PLACE	± SEE CHART	± ---
0 PLACES	± ---	± ---
ANGULAR TOL	± ---	

DRAFT WHERE APPLICABLE MUST REMAIN WITHIN DIMENSIONS

CURRENT REV DESC: MIGRATED TO ECTR/NX. ADDED THE OPPOSITE END PRODUCT VIEW WITH GRAPHICS.REMOVED OBSOLETED PNS AS PER PCN #512245

EC NO: 741427
DRWN: ABENJAMINLW 2021/07/23
CHK'D: DACHAMMER 2023/03/07
APPR: JFMURPHY 2023/03/08

INITIAL REVISION:
DRWN: CYORK 2006/08/30
APPR: JMACNEIL 2006/08/31

THIRD ANGLE PROJECTION | DRAWING: B-SIZE | SERIES: 38770

molex

9.53 [.375] DOUBLE ROW
LOW PROFILE BTS ASSY

PRODUCT CUSTOMER DRAWING

DOCUMENT NUMBER	DOC TYPE	DOC PART	REVISION
SD-38770-004	PSD	001	B2

MATERIAL NUMBER	CUSTOMER	SHEET NUMBER
SEE CHART	GENERAL MARKET	2 OF 2

DOCUMENT STATUS	P1	RELEASE DATE	2023/03/08 16:05:23

FORMAT: Eng-lega-portrait-prod-B
REVISION: E
DATE: 2020/01/14