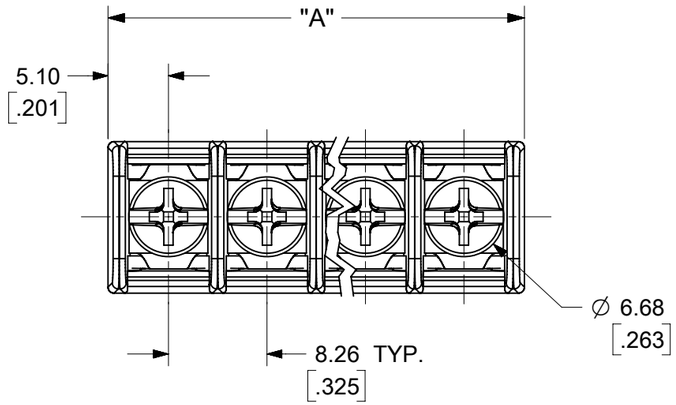


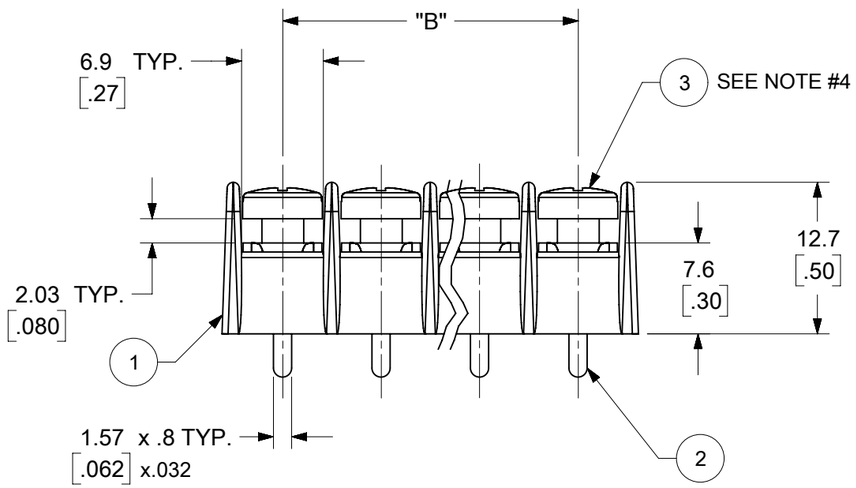


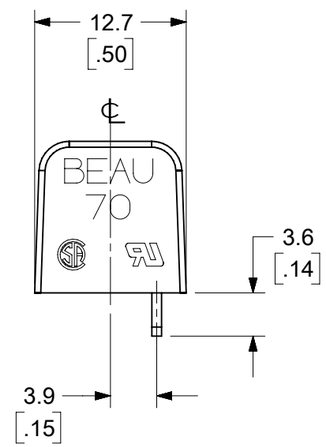


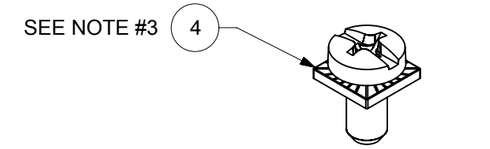


REF. -50 OPT. SCREW
(WHERE APPLICABLE)

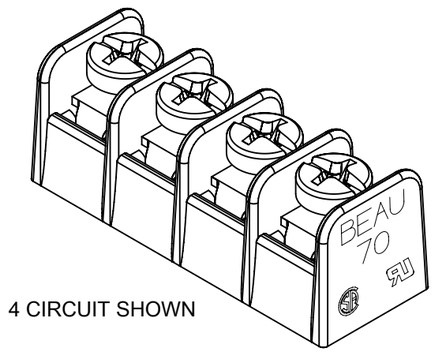


4 CIRCUIT SHOWN

NOTES:

1. MATERIAL: SEE TABLE
2. FINISHES: SEE TABLE.
3. BOTH OPTIONS ARE WIRE READY.
4. DIMS ARE SHOWN IN MM/INCH.

| TOLERANCES | | | |
|---|---|---|---|
| MM | TOL | INCH | TOL |
| 0-6 | ±0.25 | 0-.24 | ±.010 |
| >6-30 | ±0.40 | .24-1.18 | ±.016 |
| >30-120 | ±0.50 | 1.18-4.76 | ±.020 |
| >120 | ±0.80 | >4.76 | ±.031 |

| ITEM | QTY. | DESCRIPTION | MATERIAL | FINISH |
|---|---|---|---|---|
| 4 | "XX" | SCREW #6-32X.250 PAN PHSLZN/BR/STEEL WRD -47-50 | STEEL | ZN CROMATE |
| 3 | "XX" | SCREW #6-32X.250 PAN PHSLZN/BR/STEEL WRD -47 | STEEL | ZN CROMATE |
| 2 | "XX" | TERMINAL | BRASS | TIN PLATE |
| 1 | 1 | BARRIER | PBT | BLACK |

THIS DRAWING CONTAINS INFORMATION THAT IS PROPRIETARY TO MOLEX ELECTRONIC TECHNOLOGIES, LLC AND SHOULD NOT BE USED WITHOUT WRITTEN PERMISSION

FUNCTIONAL SYMBOLS: A = 0, C = 0, P = 0

DIVISIONAL SYMBOLS

DIMENSION UNITS: MM/INCH
SCALE: 2:1

GENERAL TOLERANCES (UNLESS SPECIFIED)

| | MM | INCH |
|---|---|---|
| 4 PLACES | ± --- | ± --- |
| 3 PLACES | ± --- | ± SEE CHART |
| 2 PLACES | ± SEE CHART | ± SEE CHART |
| 1 PLACE | ± SEE CHART | ± --- |
| 0 PLACES | ± --- | ± --- |
| ANGULAR TOL | ± --- | |

DRAFT WHERE APPLICABLE MUST REMAIN WITHIN DIMENSIONS

CURRENT REV DESC: NEW RELEASE

EC NO: 685014
DRWN: ABENJAMINLW 2021/11/09
CHK'D: DACHAMMER 2021/11/10
APPR: JFMURPHY 2021/11/11

INITIAL REVISION:
DRWN: ABENJAMINLW 2021/11/09
APPR: JFMURPHY 2021/11/11

THIRD ANGLE PROJECTION

DRAWING: B-SIZE
SERIES: 38700

molex

8.26/.325 SR PCB BTS
WIRE READY SCREWS
NO MOUNTING ENDS

PRODUCT CUSTOMER DRAWING

| DOCUMENT NUMBER | DOC TYPE | DOC PART | REVISION |
|---|---|---|---|
| 387008102 | PSD | 000 | A |

| MATERIAL NUMBER | CUSTOMER | SHEET NUMBER |
|---|---|---|
| SEE SHEET-2 | GENERAL MARKET | 1 OF 2 |

| DOCUMENT STATUS | P1 | RELEASE DATE | 2021/11/11 17:05:58 |
|---|---|---|---|

FORMAT: Eng-lega-master-tb-prod-B
REVISION: E1
DATE: 2021/05/01

| NO. OF CIRCUITS | DIM. "A" | | DIM. "B" | | OPT. -47 MATERIAL NO. | OPT. -47-50 MATERIAL NO. |
|---|---|---|---|---|---|---|
| | MM | INCH | MM | INCH | | |
| 2 | 18.5 | .73 | 8.26 | .325 | 387008102 | 387008702 |
| 3 | 26.8 | 1.06 | 16.51 | .650 | 387008103 | 387008703 |
| 4 | 35.0 | 1.38 | 24.77 | .975 | 387008104 | 387008704 |
| 5 | 43.3 | 1.71 | 33.02 | 1.300 | 387008105 | 387008705 |
| 6 | 51.5 | 2.03 | 41.28 | 1.625 | 387008106 | 387008706 |
| 7 | 59.8 | 2.36 | 49.53 | 1.950 | 387008107 | 387008707 |
| 8 | 68.0 | 2.68 | 57.79 | 2.275 | 387008108 | 387008708 |
| 9 | 76.3 | 3.01 | 66.04 | 2.600 | 387008109 | 387008709 |
| 10 | 84.6 | 3.33 | 74.30 | 2.925 | 387008110 | 387008710 |
| 11 | 92.8 | 3.66 | 82.55 | 3.250 | 387008111 | 387008711 |
| 12 | 101.1 | 3.98 | 90.81 | 3.575 | 387008112 | 387008712 |
| 13 | 109.3 | 4.31 | 99.06 | 3.900 | 387008113 | 387008713 |
| 14 | 117.6 | 4.63 | 107.32 | 4.225 | 387008114 | 387008714 |
| 15 | 125.8 | 4.96 | 115.57 | 4.550 | 387008115 | 387008715 |
| 16 | 134.1 | 5.28 | 123.83 | 4.875 | 387008116 | 387008716 |
| 17 | 142.3 | 5.61 | 132.08 | 5.200 | 387008117 | 387008717 |
| 18 | 150.6 | 5.93 | 140.34 | 5.525 | 387008118 | 387008718 |
| 19 | 158.9 | 6.26 | 148.59 | 5.850 | 387008119 | 387008719 |
| 20 | 167.1 | 6.58 | 156.85 | 6.175 | 387008120 | 387008720 |
| 21 | 175.4 | 6.91 | 165.10 | 6.500 | 387008121 | 387008721 |
| 22 | 183.6 | 7.23 | 173.36 | 6.825 | 387008122 | 387008722 |
| 23 | 191.9 | 7.56 | 181.61 | 7.150 | 387008123 | 387008723 |
| 24 | 200.1 | 7.88 | 189.87 | 7.475 | 387008124 | 387008724 |
| 25 | 208.4 | 8.21 | 198.12 | 7.800 | 387008125 | 387008725 |
| 26 | 216.6 | 8.53 | 206.38 | 8.125 | 387008126 | 387008726 |
| 27 | 224.9 | 8.86 | 214.63 | 8.450 | 387008127 | 387008727 |
| 28 | 233.1 | 9.18 | 222.89 | 8.775 | 387008128 | 387008728 |
| 29 | 241.4 | 9.51 | 231.14 | 9.100 | 387008129 | 387008729 |
| 30 | 249.7 | 9.83 | 239.40 | 9.425 | 387008130 | 387008730 |

| TOLERANCES | | | |
|---|---|---|---|
| MM | TOL | INCH | TOL |
| 0-6 | ±0.25 | 0-.24 | ±.010 |
| >6-30 | ±0.40 | .24-1.18 | ±.016 |
| >30-120 | ±0.50 | 1.18-4.76 | ±.020 |
| >120 | ±0.80 | >4.76 | ±.031 |

FUNCTIONAL SYMBOLS
EA = 0
EC = 0
EP = 0
DIVISIONAL SYMBOLS

THIS DRAWING CONTAINS INFORMATION THAT IS PROPRIETARY TO MOLEX ELECTRONIC TECHNOLOGIES, LLC AND SHOULD NOT BE USED WITHOUT WRITTEN PERMISSION

DIMENSION UNITS: MM/INCH
SCALE: 2:1

GENERAL TOLERANCES (UNLESS SPECIFIED)

| | MM | INCH |
|---|---|---|
| 4 PLACES | ± --- | ± --- |
| 3 PLACES | ± --- | ± SEE CHART |
| 2 PLACES | ± SEE CHART | ± SEE CHART |
| 1 PLACE | ± SEE CHART | ± --- |
| 0 PLACES | ± --- | ± --- |
| ANGULAR TOL | ± --- | |

DRAFT WHERE APPLICABLE MUST REMAIN WITHIN DIMENSIONS

CURRENT REV DESC: NEW RELEASE

EC NO: 685014
DRWN: ABENJAMINLW 2021/11/09
CHK'D: DACHAMMER 2021/11/10
APPR: JFMURPHY 2021/11/11

INITIAL REVISION:
DRWN: ABENJAMINLW 2021/11/09
APPR: JFMURPHY 2021/11/11

THIRD ANGLE PROJECTION | DRAWING: B-SIZE | SERIES: 38700

molex

8.26/.325 SR PCB BTS
WIRE READY SCREWS
NO MOUNTING ENDS

PRODUCT CUSTOMER DRAWING

| DOCUMENT NUMBER | DOC TYPE | DOC PART | REVISION |
|---|---|---|---|
| 387008102 | PSD | 000 | A |

| MATERIAL NUMBER | CUSTOMER | SHEET NUMBER |
|---|---|---|
| SEE CHART | GENERAL MARKET | 2 OF 2 |

| DOCUMENT STATUS | P1 | RELEASE DATE | 2021/11/11 17:05:58 |
|---|---|---|---|

FORMAT: Eng-lega-master-tb-prod-B
REVISION: E1
DATE: 2021/05/01