38724

NO. OF CIRCUITS	DIM. "A" IN	DIM. "A" mm	DIM. "B" IN	DIM. "B" mm	DIM. "C" IN	DIM. "C" mm	DIM. "D" IN	DIM. "D" mm	ASSEMBLY MATERIAL NO. (STANDARD)	ASSEMBLY MATERIAL NO. (-49 OPT)	ASSEMBLY MATERIAL NO. (-50 OPT)
02	1.43	36.3	1.125	28.58	0.83	21.1	.375	9.53			387242402
03	1.80	45.7	1.500	38.10	1.21	30.7	.750	19.05			387242403
04	2.18	55.4	1.875	47.63	1.58	40.2	1.125	28.58			387291306
05	2.55	64.8	2.250	57.15	1.96	49.7	1.500	38.10	387242005		
06	2.93	74.4	2.625	66.68	2.33	59.2	1.875	47.63	387242006		
07	3.30	83.8	3.000	76.20	2.71	68.8	2.250	57.15			
08	3.68	93.5	3.375	85.73	3.08	78.3	2.625	66.68	387242008		387242408
09	4.05	102.9	3.750	95.25	3.46	87.8	3.000	76.20	387242009		
10	4.43	112.5	4.125	104.78	3.83	97.3	3.375	85.73	387242010		
11	4.80	121.9	4.500	114.30	4.21	106.9	3.750	95.25	387242011		
12	5.18	131.6	4.875	123.83	4.58	116.4	4.125	104.78			
13	5.55	141.0	5.250	133.35	4.96	125.9	4.500	114.30			

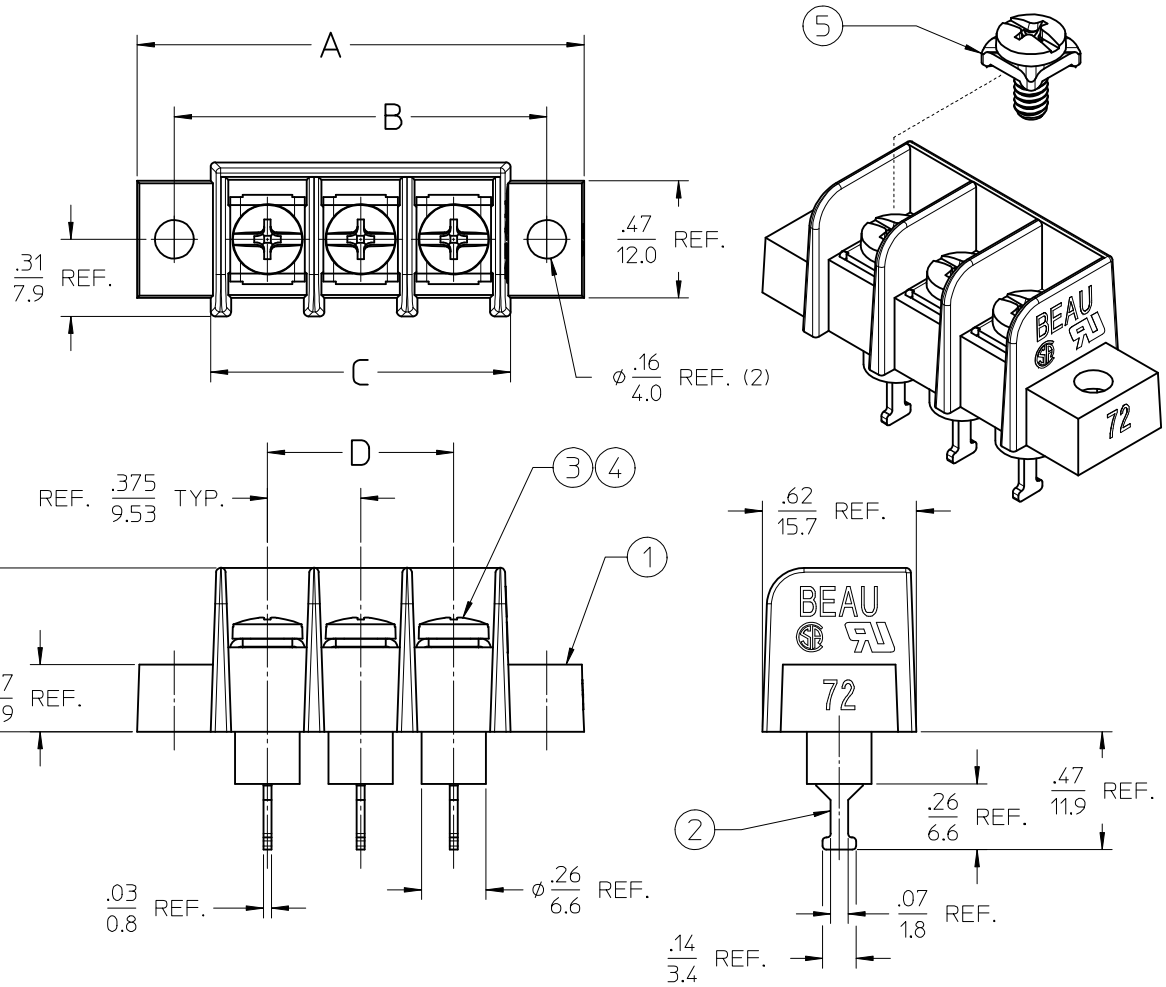

NOTES:

1. MATERIAL: SEE TABLE
2. FINISH: SEE TABLE
3. "XX" REFERS TO QUANTITY OF CIRCUITS
4. PRODUCT SPEC: PS-38710-001
5. PART IS TO BE RoHS COMPLIANT

ITEM	QTY.	DESCRIPTION	MATERIAL	FINISH
5	XX	SCRW&WSHR, #6-32X.25, PAN,PH-SL,(-50 OPT)	STEEL	ZN, CLEAR CHROMATE
4	XX	SCREW, #6-32X.250, BHD PH/SL (-49 OPT)	BRASS	NICKEL PLATE
3	XX	SCREW, #6-32X.250, BHD PH/SL (STANDARD)	STEEL	ZN, CLEAR CHROMATE
2	XX	TERMINAL, WW, #6-32	BRASS	TIN PLATE
1	1	INSULATOR, CS INSL.	POLYESTER (PBT)	BLACK

RELEASED
EC NO: IPG2015-0980
DRWN:RSTONE 2014/11/21
CH'KD:B RUPERT 2014/11/25
APPR: JFMURPHY 2015/04/22
DESCRIPTION
REV A

QUALITY SYMBOLS
▼=0
Ⓒ=0

GENERAL TOLERANCES (UNLESS SPECIFIED)

	mm	INCH
4 PLACES	± ---	± ---
3 PLACES	± ---	± ---
2 PLACES	± ---	± .01
1 PLACE	± 0.3	± ---
0 PLACE	± ---	± ---

ANGULAR ± 2 °
DRAFT WHERE APPLICABLE MUST REMAIN WITHIN DIMENSIONS

DIMENSION STYLE: IN/MM
SCALE: 2:1
DESIGN UNITS: INCH
THIRD ANGLE PROJECTION

		DATE
DRAWN BY	RSTONE	2014/11/21
CHECKED BY	B RUPERT	2014/11/25
APPROVED BY	JFMURPHY	2015/04/22

TITLE: SINGLE ROW BARRIER TERMINAL STRIP ASSY .375 PITCH STYLE 2

molex

MATERIAL NO.: SEE CHART
DOCUMENT NO.: SD-38724-004
SHEET NO.: 1 OF 1
SIZE: B

THIS DRAWING CONTAINS INFORMATION THAT IS PROPRIETARY TO MOLEX INCORPORATED AND SHOULD NOT BE USED WITHOUT WRITTEN PERMISSION