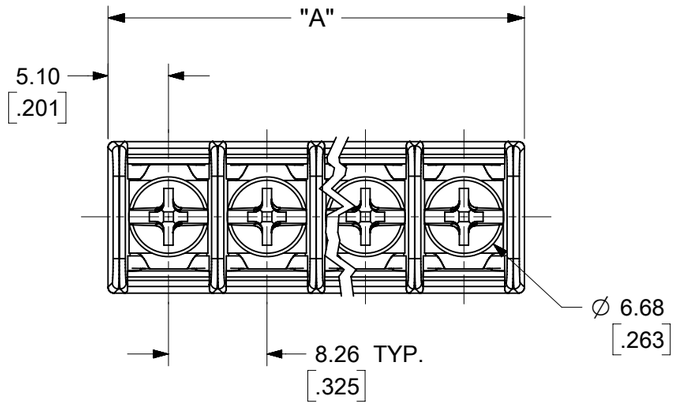

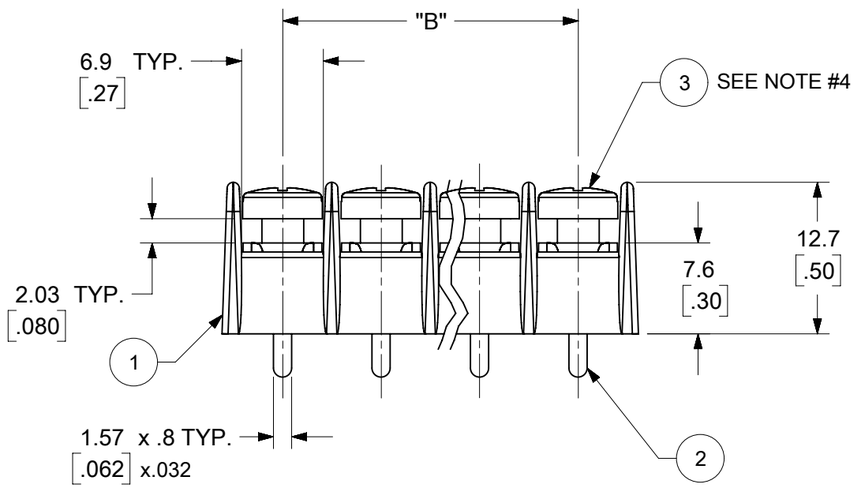

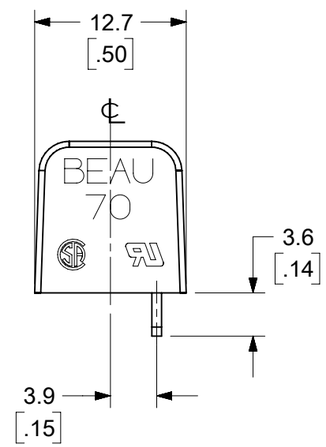

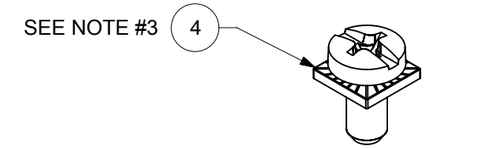

REF. -50 OPT. SCREW
(WHERE APPLICABLE)

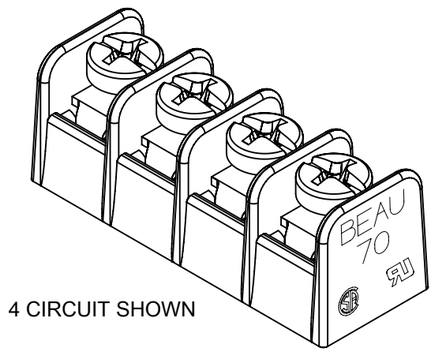

4 CIRCUIT SHOWN

NOTES:

1. MATERIAL: SEE TABLE
2. FINISHES: SEE TABLE.
3. BOTH OPTIONS ARE WIRE READY.
4. DIMS ARE SHOWN IN MM/INCH.

TOLERANCES			
MM	TOL	INCH	TOL
0-6	±0.25	0-.24	±.010
>6-30	±0.40	.24-1.18	±.016
>30-120	±0.50	1.18-4.76	±.020
>120	±0.80	>4.76	±.031

ITEM	QTY.	DESCRIPTION	MATERIAL	FINISH
4	"XX"	SCREW #6-32X.250 PAN PHSLZN/BR/STEEL WRD -47-50	STEEL	ZN CROMATE
3	"XX"	SCREW #6-32X.250 PAN PHSLZN/BR/STEEL WRD -47	STEEL	ZN CROMATE
2	"XX"	TERMINAL	BRASS	TIN PLATE
1	1	BARRIER	PBT	BLACK

THIS DRAWING CONTAINS INFORMATION THAT IS PROPRIETARY TO MOLEX ELECTRONIC TECHNOLOGIES, LLC AND SHOULD NOT BE USED WITHOUT WRITTEN PERMISSION

FUNCTIONAL SYMBOLS: A = 0, C = 0, P = 0

DIVISIONAL SYMBOLS

DIMENSION UNITS: MM/INCH
SCALE: 2:1

GENERAL TOLERANCES (UNLESS SPECIFIED)

	MM	INCH
4 PLACES	± ---	± ---
3 PLACES	± ---	± SEE CHART
2 PLACES	± SEE CHART	± SEE CHART
1 PLACE	± SEE CHART	± ---
0 PLACES	± ---	± ---
ANGULAR TOL	± ---	

DRAFT WHERE APPLICABLE MUST REMAIN WITHIN DIMENSIONS

CURRENT REV DESC: NEW RELEASE

EC NO: 685014
DRWN: ABENJAMINLW 2021/11/09
CHK'D: DACHAMMER 2021/11/10
APPR: JFMURPHY 2021/11/11

INITIAL REVISION:
DRWN: ABENJAMINLW 2021/11/09
APPR: JFMURPHY 2021/11/11

THIRD ANGLE PROJECTION

DRAWING: B-SIZE
SERIES: 38700

molex

8.26/.325 SR PCB BTS
WIRE READY SCREWS
NO MOUNTING ENDS

PRODUCT CUSTOMER DRAWING

DOCUMENT NUMBER	DOC TYPE	DOC PART	REVISION
387008102	PSD	000	A

MATERIAL NUMBER	CUSTOMER	SHEET NUMBER
SEE SHEET-2	GENERAL MARKET	1 OF 2

DOCUMENT STATUS	P1	RELEASE DATE	2021/11/11 17:05:58

FORMAT: Eng-lega-master-tb-prod-B
REVISION: E1
DATE: 2021/05/01

NO. OF CIRCUITS	DIM. "A"		DIM. "B"		OPT. -47 MATERIAL NO.	OPT. -47-50 MATERIAL NO.
	MM	INCH	MM	INCH		
2	18.5	.73	8.26	.325	387008102	387008702
3	26.8	1.06	16.51	.650	387008103	387008703
4	35.0	1.38	24.77	.975	387008104	387008704
5	43.3	1.71	33.02	1.300	387008105	387008705
6	51.5	2.03	41.28	1.625	387008106	387008706
7	59.8	2.36	49.53	1.950	387008107	387008707
8	68.0	2.68	57.79	2.275	387008108	387008708
9	76.3	3.01	66.04	2.600	387008109	387008709
10	84.6	3.33	74.30	2.925	387008110	387008710
11	92.8	3.66	82.55	3.250	387008111	387008711
12	101.1	3.98	90.81	3.575	387008112	387008712
13	109.3	4.31	99.06	3.900	387008113	387008713
14	117.6	4.63	107.32	4.225	387008114	387008714
15	125.8	4.96	115.57	4.550	387008115	387008715
16	134.1	5.28	123.83	4.875	387008116	387008716
17	142.3	5.61	132.08	5.200	387008117	387008717
18	150.6	5.93	140.34	5.525	387008118	387008718
19	158.9	6.26	148.59	5.850	387008119	387008719
20	167.1	6.58	156.85	6.175	387008120	387008720
21	175.4	6.91	165.10	6.500	387008121	387008721
22	183.6	7.23	173.36	6.825	387008122	387008722
23	191.9	7.56	181.61	7.150	387008123	387008723
24	200.1	7.88	189.87	7.475	387008124	387008724
25	208.4	8.21	198.12	7.800	387008125	387008725
26	216.6	8.53	206.38	8.125	387008126	387008726
27	224.9	8.86	214.63	8.450	387008127	387008727
28	233.1	9.18	222.89	8.775	387008128	387008728
29	241.4	9.51	231.14	9.100	387008129	387008729
30	249.7	9.83	239.40	9.425	387008130	387008730

TOLERANCES			
MM	TOL	INCH	TOL
0-6	±0.25	0-.24	±.010
>6-30	±0.40	.24-1.18	±.016
>30-120	±0.50	1.18-4.76	±.020
>120	±0.80	>4.76	±.031

FUNCTIONAL SYMBOLS
EA = 0
EC = 0
EP = 0
DIVISIONAL SYMBOLS

THIS DRAWING CONTAINS INFORMATION THAT IS PROPRIETARY TO MOLEX ELECTRONIC TECHNOLOGIES, LLC AND SHOULD NOT BE USED WITHOUT WRITTEN PERMISSION

DIMENSION UNITS: MM/INCH
SCALE: 2:1

GENERAL TOLERANCES (UNLESS SPECIFIED)

	MM	INCH
4 PLACES	± ---	± ---
3 PLACES	± ---	± SEE CHART
2 PLACES	± SEE CHART	± SEE CHART
1 PLACE	± SEE CHART	± ---
0 PLACES	± ---	± ---
ANGULAR TOL	± ---	

DRAFT WHERE APPLICABLE MUST REMAIN WITHIN DIMENSIONS

CURRENT REV DESC: NEW RELEASE

EC NO: 685014
DRWN: ABENJAMINLW 2021/11/09
CHK'D: DACHAMMER 2021/11/10
APPR: JFMURPHY 2021/11/11

INITIAL REVISION:
DRWN: ABENJAMINLW 2021/11/09
APPR: JFMURPHY 2021/11/11

THIRD ANGLE PROJECTION | DRAWING: B-SIZE | SERIES: 38700

molex

8.26/.325 SR PCB BTS
WIRE READY SCREWS
NO MOUNTING ENDS

PRODUCT CUSTOMER DRAWING

DOCUMENT NUMBER	DOC TYPE	DOC PART	REVISION
387008102	PSD	000	A

MATERIAL NUMBER	CUSTOMER	SHEET NUMBER
SEE CHART	GENERAL MARKET	2 OF 2

DOCUMENT STATUS	P1	RELEASE DATE	2021/11/11 17:05:58

FORMAT: Eng-lega-master-tb-prod-B
REVISION: E1
DATE: 2021/05/01