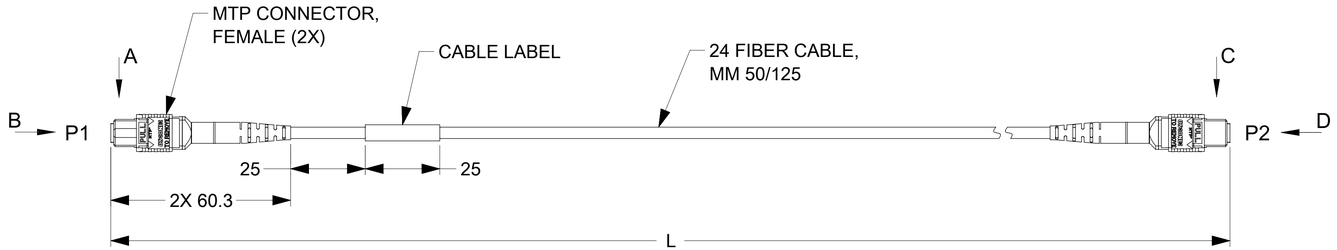

SINGLE JACKET ASSEMBLY

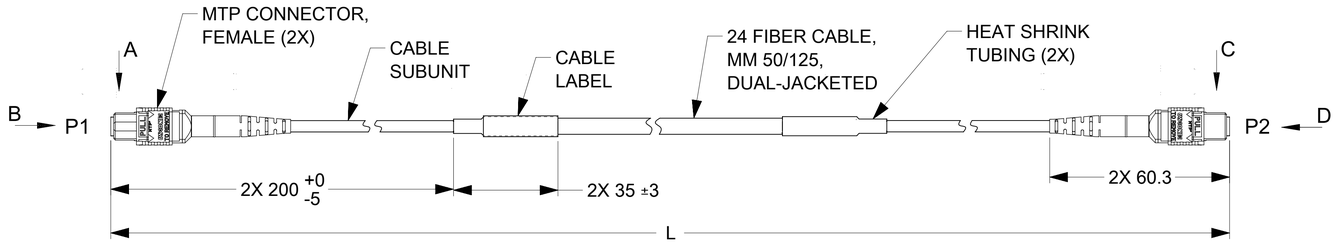

DUAL JACKET ASSEMBLY

FOR PART NUMBERS SEE SH. 2

CONNECTIONS	
FROM P1	TO P2
Rx-1	Tx-1
Rx-2	Tx-2
Rx-3	Tx-3
Rx-4	Tx-4
Rx-5	Tx-5
Rx-6	Tx-6
Rx-7	Tx-7
Rx-8	Tx-8
Rx-9	Tx-9
Rx-10	Tx-10
Rx-11	Tx-11
Rx-12	Tx-12
Tx-1	Rx-1
Tx-2	Rx-2
Tx-3	Rx-3
Tx-4	Rx-4
Tx-5	Rx-5
Tx-6	Rx-6
Tx-7	Rx-7
Tx-8	Rx-8
Tx-9	Rx-9
Tx-10	Rx-10
Tx-11	Rx-11
Tx-12	Rx-12

VIEW A

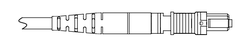

VIEW C

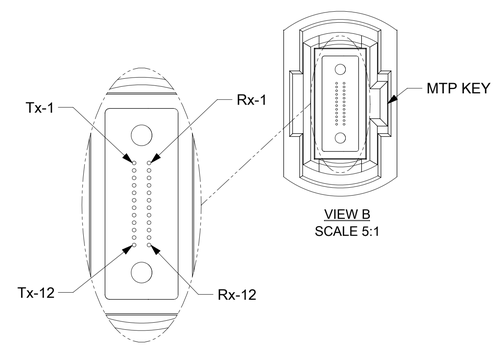

VIEW B
SCALE 5:1

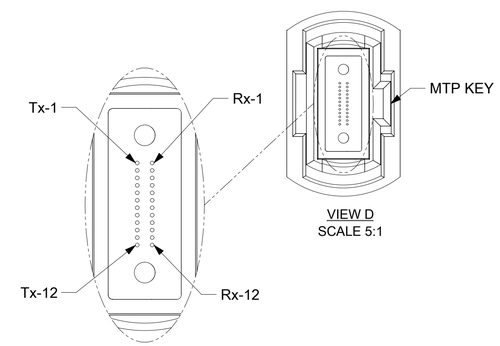

VIEW D
SCALE 5:1

NOTES:

1. CABLE ASSEMBLY SPECIFICATIONS:

OPTICAL PROPERTIES	
FIBER TYPE	MULTIMODE 50/125 µm BEND-INSENSITIVE
CONNECTOR INSERTION LOSS (MAX.)	1.0 dB AT 850/1300 nm
CABLE ATTENUATION (MAX.)	
OM2 & OM3	3.5/1.2 dB/km AT 850/1300 nm
OM4	3.0/1.0 dB/km AT 850/1300 nm
OVERFILLED LAUNCH BANDWIDTH, MIN.	SEE TABLE 1
ENVIRONMENTAL PROPERTIES	
CONNECTOR MATERIALS	UL94 V-0
CABLE FLAMMABILITY RATING	
PLENUM	OFNP (NFPA262/UL 910)
LSZH (IEC 60754-2)	OFNR-LS/FT4 (UL 1666/UL 1685)
OPERATING TEMPERATURE RANGE	-20°C TO +70°C
MECHANICAL PROPERTIES	
FIBER COUNT	4 Tx X 4 Rx
CABLE MIN. BEND RADIUS	
SHORT TERM	45mm - SINGLE JACKET 72mm - DUAL JACKET
LONG TERM	20mm - SINGLE JACKET 48mm - DUAL JACKET
NO LOAD	10mm - SINGLE JACKET OR SUBUNIT OF DUAL JACKET
CABLE COMPRESSION FORCE	>3.5 N/mm

2. CABLE LABEL IS PRINTED WITH MOLEX PN AND SERIAL NUMBER.

TABLE 1

FIBER TYPE	OVERFILLED LAUNCH BANDWIDTH, MIN. (MHz-km)		10 GIGABIT ETHERNET LINK DISTANCE, MIN. (m)		EFFECTIVE MODAL BANDWIDTH (MHz-km)
	850 nm	1300 nm	850 nm	1300 nm	850 nm
STANDARD BANDWIDTH (OM2)	500	500	86	---	---
HIGH BANDWIDTH (OM3)	1500	500	300	---	2000
HIGH BANDWIDTH (OM4)	3500	550	550	---	4700

THIS DRAWING CONTAINS INFORMATION THAT IS PROPRIETARY TO MOLEX ELECTRONIC TECHNOLOGIES, LLC AND SHOULD NOT BE USED WITHOUT WRITTEN PERMISSION

DIMENSION UNITS	SCALE
mm	1:1

GENERAL TOLERANCES (UNLESS SPECIFIED)

ANGULAR TOL	± 0.5 °
4 PLACES	±
3 PLACES	±
2 PLACES	±
1 PLACE	±
0 PLACES	±

DRAFT WHERE APPLICABLE MUST REMAIN WITHIN DIMENSIONS

CURRENT REV DESC:

EC NO: 747900
DRWN: IGUMIN 2023/04/14
CHK'D: GGENCHANOK 2023/05/18
APPR: GGENCHANOK 2023/05/18

INITIAL REVISION:
DRWN: IGUMIN 2009/01/16
APPR: IGUMIN 2009/01/16

molex

MOLEX CXP OPTICAL
CABLE ASSEMBLY

PRODUCT CUSTOMER DRAWING

DOCUMENT NUMBER	DOC TYPE	DOC PART	REVISION
SD-106284-0001	PSD	001	H

THIRD ANGLE PROJECTION	DRAWING	SERIES	MATERIAL NUMBER	CUSTOMER	SHEET NUMBER
	D-SIZE	106284	SEE TABLE	GENERAL MARKET	1 OF 2

DOCUMENT STATUS	P1	RELEASE DATE	2023/05/18 15:29:01

STANDARD BANDWIDTH (OM2 FIBER)			HIGH BANDWIDTH (OM3 FIBER)						HIGH BANDWIDTH (OM4 FIBER)						OVERALL LENGTH L (m)
ASSY P/N	CABLE COLOR / OD FLAMMABILITY / TYPE	CONN. COLOR	ASSY P/N	CABLE COLOR / OD FLAMMABILITY / TYPE	CONN. COLOR	ASSY P/N	CABLE COLOR / OD FLAMMABILITY / TYPE	CONN. COLOR	ASSY P/N	CABLE COLOR / OD FLAMMABILITY / TYPE	CONN. COLOR	ASSY P/N	CABLE COLOR / OD FLAMMABILITY / TYPE	CONN. COLOR	
1062840001	ORANGE / 3.8mm PLENUM / SINGLE JACKET	BLACK	1062841001	AQUA / 3.8mm PLENUM / SINGLE JACKET	AQUA	1062841401	AQUA / 3.0mm LSZH, RISER / SINGLE JACKET	AQUA	1062847001	AQUA / 3.8mm PLENUM / SINGLE JACKET	AQUA	1062847401	AQUA / 3.0mm LSZH, RISER / SINGLE JACKET	AQUA	1.0 +0.2/-0
1062840151			TBA			TBA			TBA			TBA			1.5 +0.2/-0
1062840002			1062841002			1062841402			1062847002			1062847402			2.0 +0.2/-0
1062840003			1062841003			1062841403			1062847003			1062847403			3.0 +0.2/-0
1062840004			1062841004			TBA			1062847004			TBA			4.0 +0.2/-0
1062840005			1062841005			1062841405			1062847005			1062847405			5.0 +0.2/-0
1062840006			1062841006			TBA			1062847006			TBA			6.0 +0.2/-0
TBA			1062841007			1062841407			1062847007			1062847407			7.0 +0.2/-0
1062840008			1062841008			TBA			1062847008			TBA			8.0 +0.2/-0
1062840010			1062841010			1062841410			1062847010			1062847410			10.0 +0.3/-0
1062840012			1062841012			TBA			1062847012			TBA			12.0 +0.3/-0
1062840015			1062841015			TBA			1062847015			TBA			15.0 +0.3/-0
1062840020			1062841020			TBA			1062847020			TBA			20.0 +0.4/-0
1062840025			1062841025			TBA			1062847025			TBA			25.0 +0.5/-0
1062840030	ORANGE / 5.4mm PLENUM / DUAL JACKET		1062841030	AQUA / 5.4mm PLENUM / DUAL JACKET		TBA	TBA		1062847030	AQUA / 5.4mm PLENUM / DUAL JACKET		TBA	TBA		30.0 +0.6/-0
1062840035			1062841035			TBA			1062847035			TBA			35.0 +0.7/-0
1062840040			1062841040			TBA			1062847040			TBA			40.0 +0.8/-0
1062840045			1062841045			TBA			1062847045			TBA			45.0 +0.9/-0
1062840050			1062841050			TBA			1062847050			TBA			50.0 +1.0/-0
1062840055			1062841055			TBA			1062847055			TBA			55.0 +1.1/-0
1062840060			1062841060			TBA			1062847060			TBA			60.0 +1.2/-0
1062840065			1062841065			TBA			1062847065			TBA			65.0 +1.3/-0
1062840070			1062841070			TBA			1062847070			TBA			70.0 +1.4/-0
1062840075			1062841075			TBA			1062847075			TBA			75.0 +1.5/-0
1062840080			1062841080			TBA			1062847080			TBA			80.0 +1.6/-0
1062840085			1062841085			TBA			1062847085			TBA			85.0 +1.7/-0
1062840090			1062841090			TBA			1062847090			TBA			90.0 +1.8/-0
1062840095			1062841095			TBA			1062847095			TBA			95.0 +1.9/-0
1062840100			1062841100			TBA			1062847100			TBA			100.0 +2.0/-0
1062840150			1062840150			TBA			1062840150			TBA			150.0 +3.0/-0
TBA			1062841200			TBA			1062847200			TBA			200.0 +4.0/-0
TBA			1062841250			TBA			1062847250			TBA			250.0 +5.0/-0
TBA			1062841300			TBA			1062847300			TBA			300.0 +6.0/-0

THIS DRAWING CONTAINS INFORMATION THAT IS PROPRIETARY TO MOLEX ELECTRONIC TECHNOLOGIES, LLC AND SHOULD NOT BE USED WITHOUT WRITTEN PERMISSION

DIMENSION UNITS	SCALE
mm	1:1

GENERAL TOLERANCES (UNLESS SPECIFIED)

ANGULAR TOL	± 0.5 °
4 PLACES	±
3 PLACES	±
2 PLACES	±
1 PLACE	±
0 PLACES	±

DRAFT WHERE APPLICABLE MUST REMAIN WITHIN DIMENSIONS

CURRENT REV DESC:

EC NO: 747900
DRWN: IGUMIN 2023/04/14
CHK'D: GGENCHANOK 2023/05/18
APPR: GGENCHANOK 2023/05/18

INITIAL REVISION:
DRWN: IGUMIN 2009/01/16
APPR: IGUMIN 2009/01/16

molex

MOLEX CXP OPTICAL CABLE ASSEMBLY

PRODUCT CUSTOMER DRAWING

DOCUMENT NUMBER	DOC TYPE	DOC PART	REVISION
SD-106284-0001	PSD	001	H

THIRD ANGLE PROJECTION	DRAWING	SERIES	MATERIAL NUMBER	CUSTOMER	SHEET NUMBER
	D-SIZE	106284	SEE TABLE	GENERAL MARKET	2 OF 2

DOCUMENT STATUS	P1	RELEASE DATE	2023/05/18 15:29:01

TEMPLATE FORMAT:SCHEMATIC
REVISION: J1
DATE: 2021/05/21