ENHANCED zQSFP+ 1X1 CAGE TO NEARSTACK (1) PICO-CLASP (1) CABLE ASSEMBLY

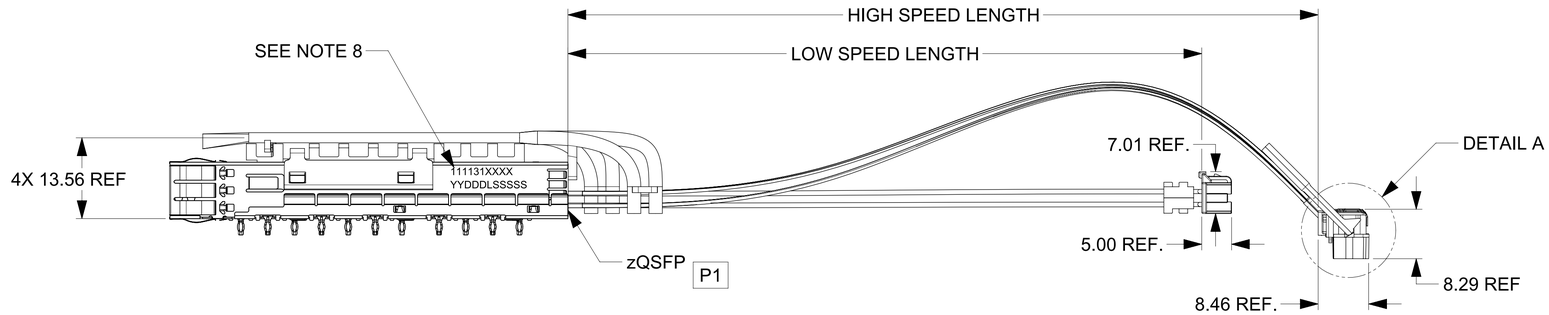

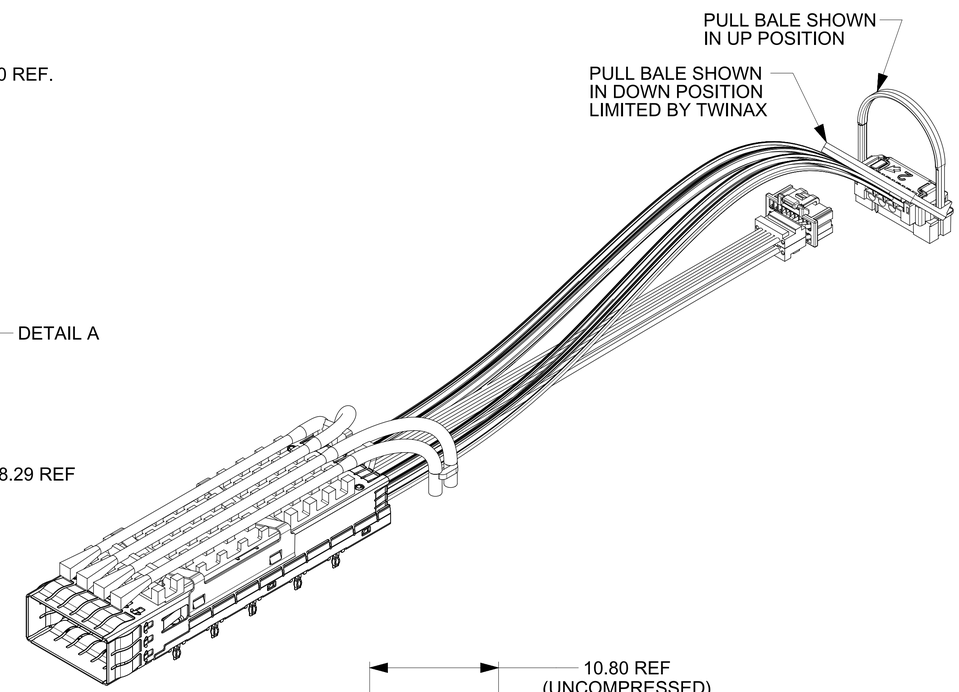

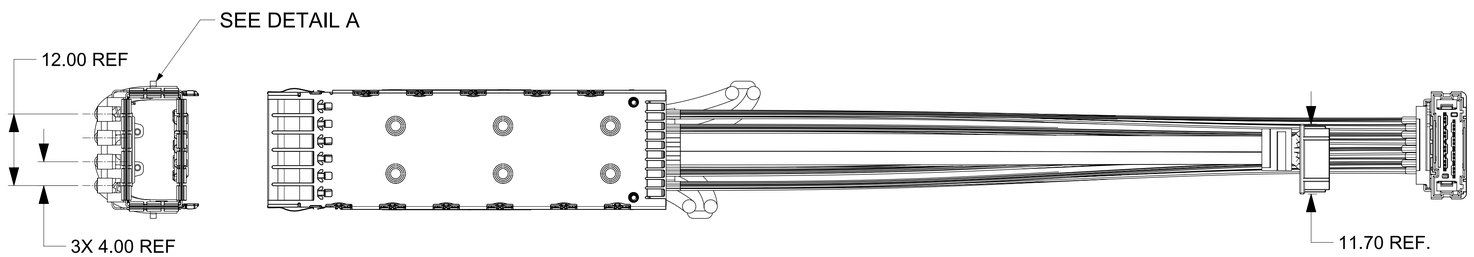

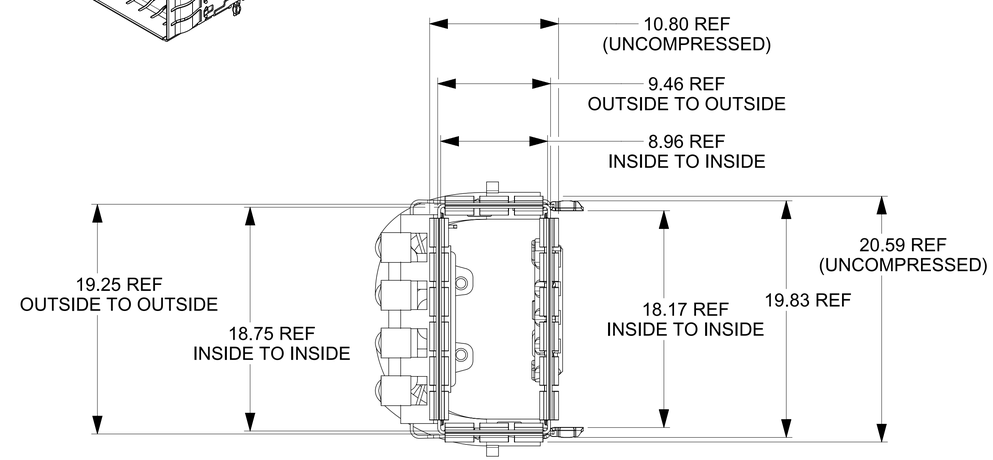

DETAIL A
SCALE 4:1

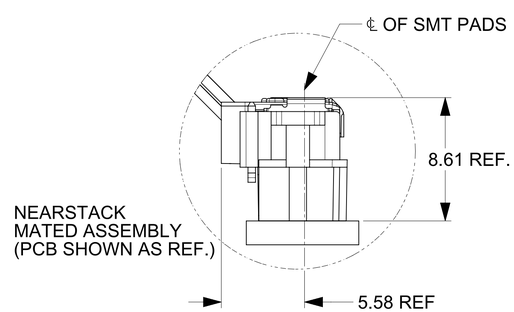

DETAIL A
SCALE 5:1

NOTES:
1. CABLE LENGTH DEPENDS ON WIRE GAUGE, DATA RATE AND HOST BOARD DRIVER CAPABILITIES.
2. MATERIALS:
   - CAGE - STAINLESS STEEL
   - HEAT SINK - ALUMINUM
   - LIGHT PIPE - TRANSPARENT POLYMER
3. TWINAX CABLE (HIGH SPEED)
   - SHIELD - ALUMINUM/POLYESTER FOIL WRAP
   - SIGNAL PAIR - 34AWG SOLID SILVER PLATED COPPER
   - DRAIN - 34AWG SOLID SILVER PLATER COPPER
   - CONFORMS TO UL VW-1
   - IMPEDENCE - 100 OHMS
   - COLOR: YELLOW
4. DISCRETE CABLE (LOW SPEED)
   - INSULATION - XLPE
   - CONDUCTOR - 28AWG SOLID SILVER PLATED COPPER
   - COLOR: BLACK
5. PRESS FIT LEGS 2.44 [0.096] LONG.
   - 1.57 [0.062] MINIMUM PCB THICKNESS FOR SINGLE SIDED USE.
   - 3.00 [0.118] MINIMUM PCB THICKNESS FOR BELLY TO BELLY USE.
6. P2: BOTH NEARSTACK RECEPTACLE MOLEX PN 2042731100 (GEN 2.0)
   MATES WITH NEARSTACK PLUG PN 2033162200 (GEN 2.0).
   P3: MOLEX PN 5011892010 UTILIZING TERMINAL PN 5011939000 (GOLD PLATED ON CRIMP BARREL)
   MATES WITH PN 5011902017.
7. RoHS COMPLIANT. NO EXEMPTIONS.
8. MARK WITH PART NUMBER SERIAL NUMBER
   - PART NUMBER: SEE PART NUMBER TABLE
   - SERIAL NUMBER:
   - YY - YEAR
   - DDD - DAY OF THE YEAR
   - L - MANUFACTURE LOCATION
   - SSSSS - SERIAL NUMBER (00001-99999)

THIS DRAWING CONTAINS INFORMATION THAT IS PROPRIETARY TO MOLEX ELECTRONIC TECHNOLOGIES, LLC AND SHOULD NOT BE USED WITHOUT WRITTEN PERMISSION

FUNCTIONAL SYMBOLS	DIMENSION UNITS: MM	SCALE: 2:1	CURRENT REV DESC: SEE REVISION TABLE
FA = 0	GENERAL TOLERANCES (UNLESS SPECIFIED)		
FC = 0	ANGULAR TOL ± 0.5°		
FE = 0	4 PLACES ±		
DIVISIONAL SYMBOLS	3 PLACES ±		STATUS: Production
	2 PLACES ± 0.130		DRWN: KIRAN N 2026-03-30
	1 PLACE ± 0.25		CHK'D: Roy Liu 2026-06-12
	0 PLACES ±		APPR: Bill Chen 2026-07-16
	DRAFT WHERE APPLICABLE MUST REMAIN WITHIN DIMENSIONS		THIRD ANGLE PROJECTION

DRAWING: D-SIZE
SERIES: 111131

molex

ENHANCED ZQSFP+ NEARSTACK TO PICO CLASP

PRODUCT CUSTOMER DRAWING

DOCUMENT NUMBER	DOC TYPE	DOC PART	REVISION
1111310799	PSD	000	J2

MATERIAL NUMBER:
CUSTOMER: GENERAL MARKET
SHEET NUMBER: 1 OF 17

zQSFP BiPASS 1 X 1 CAGE ASSEMBLY

NOTE: ALL LENGTHS ±5.0mm

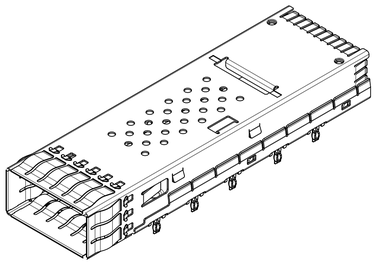

CLOSED TOP

PART NUMBER	PICO-CLASP LOW SPEED LENGTH (MM)	NEARSTACK (GEN 1.0) HIGH SPEED LENGTH (MM)	REMARK
1111311920	75	150	OBSOLETED
1111311921	75	200	OBSOLETED
1111311922	75	300	OBSOLETED
1111311923	75	400	OBSOLETED
1111311924	75	500	OBSOLETED

PART NUMBER	PICO-CLASP LOW SPEED LENGTH (MM)	NEARSTACK (GEN 2.0) HIGH SPEED LENGTH (MM)	TOOLING STATUS
1111311960	75	150	TOOLED
1111311961	75	200	
1111311962	75	300	
1111311963	75	400	
1111311964	75	500	

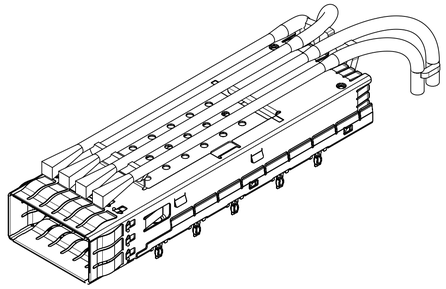

CLOSE TOP WITH LIGHTPIPE

PART NUMBER	PICO-CLASP LOW SPEED LENGTH (MM)	NEARSTACK (GEN 1.0) HIGH SPEED LENGTH (MM)	REMARK
1111311930	75	150	OBSOLETED
1111311931	75	200	OBSOLETED
1111311932	75	300	OBSOLETED
1111311933	75	400	OBSOLETED
1111311934	75	500	OBSOLETED

PART NUMBER	PICO-CLASP LOW SPEED LENGTH (MM)	NEARSTACK (GEN 2.0) HIGH SPEED LENGTH (MM)	TOOLING STATUS
1111311970	75	150	TOOLED
1111311971	75	200	
1111311972	75	300	
1111311973	75	400	
1111311974	75	500	

*SEE SHEET 8 FOR LIGHT PIPE OPTIONS

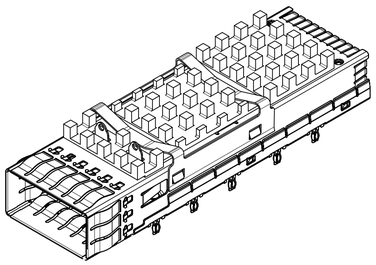

OPEN TOP WITH HEAT SINK

PART NUMBER	PICO-CLASP LOW SPEED LENGTH (MM)	NEARSTACK (GEN 1.0) HIGH SPEED LENGTH (MM)	REMARK
1111311940	75	150	OBSOLETED
1111311941	75	200	OBSOLETED
1111311942	75	300	OBSOLETED
1111311945	75	350	OBSOLETED
1111311943	75	400	OBSOLETED
1111311944	75	500	OBSOLETED

PART NUMBER	PICO-CLASP LOW SPEED LENGTH (MM)	NEARSTACK (GEN 2.0) HIGH SPEED LENGTH (MM)	TOOLING STATUS
1111311980	75	150	TOOLED
1111311981	75	200	
1111311982	75	300	
1111311983	75	400	
1111311984	75	500	

*SEE SHEET 8 FOR HEAT SINK OPTIONS

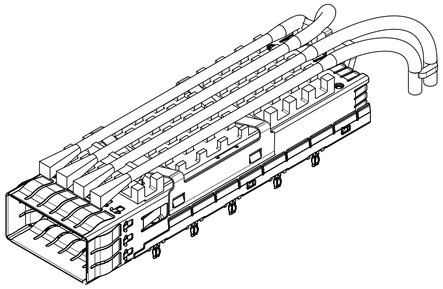

OPEN TOP WITH HEAT SINK AND LIGHTPIPE

PART NUMBER	PICO-CLASP LOW SPEED LENGTH (MM)	NEARSTACK (GEN 1.0) HIGH SPEED LENGTH (MM)	REMARK
1111311911	75	150	OBSOLETED
1111311912	75	200	OBSOLETED
1111311913	75	300	OBSOLETED
1111311914	75	400	OBSOLETED
1111311915	75	500	OBSOLETED

PART NUMBER	PICO-CLASP LOW SPEED LENGTH (MM)	NEARSTACK (GEN 2.0) HIGH SPEED LENGTH (MM)	TOOLING STATUS
1111311950	75	150	TOOLED
1111311951	75	200	
1111311952	75	300	
1111311953	75	400	
1111311954	75	500	

*SEE SHEET 8 FOR HEAT SINK AND LIGHT PIPE OPTIONS

THIS DRAWING CONTAINS INFORMATION THAT IS PROPRIETARY TO MOLEX ELECTRONIC TECHNOLOGIES, LLC AND SHOULD NOT BE USED WITHOUT WRITTEN PERMISSION

FUNCTIONAL SYMBOLS: FA = 0, FC = 0, FP = 0

DIVISIONAL SYMBOLS

DIMENSION UNITS: MM | SCALE: 2:1

GENERAL TOLERANCES (UNLESS SPECIFIED)

ANGULAR TOL	± 0.5°
4 PLACES	±
3 PLACES	±
2 PLACES	± 0.130
1 PLACE	± 0.25
0 PLACES	±

DRAFT WHERE APPLICABLE MUST REMAIN WITHIN DIMENSIONS

CURRENT REV DESC: SEE REVISION TABLE

STATUS: Production

DRWN:	KIRAN N	2026-03-30
CHK'D:	Roy Liu	2026-06-12
APPR:	Bill Chen	2026-07-16

THIRD ANGLE PROJECTION | DRAWING: D-SIZE | SERIES: 111131

molex

ENHANCED ZQSFP+ NEARSTACK TO PICO CLASP

PRODUCT CUSTOMER DRAWING

DOCUMENT NUMBER	DOC TYPE	DOC PART	REVISION
1111310799	PSD	000	J2

MATERIAL NUMBER | CUSTOMER: GENERAL MARKET | SHEET NUMBER: 2 OF 17

FORMAT TC-Spec42-D
REVISION: B
DATE: 2022/08/01

zQSFP BiPASS 1 X 2 CAGE ASSEMBLY

NOTE: ALL LENGTHS ±5.0mm

NOTE : NOT TOOLED - DESIGN ONLY

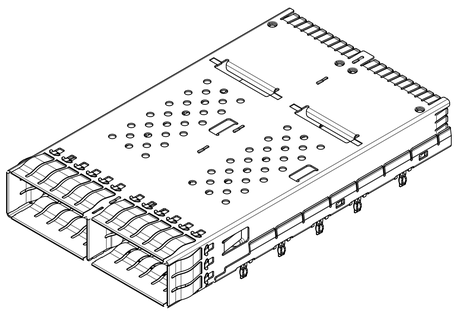

CLOSED TOP

PART NUMBER	PICO-CLASP LOW SPEED LENGTH (MM)	NEARSTACK (GEN 1.0) HIGH SPEED LENGTH (MM)	REMARK
1111313011	75	150	OBSOLETED
1111313012	75	200	OBSOLETED
1111313013	75	300	OBSOLETED
1111313014	75	400	OBSOLETED
1111313015	75	500	OBSOLETED
1111313016	75	210	OBSOLETED

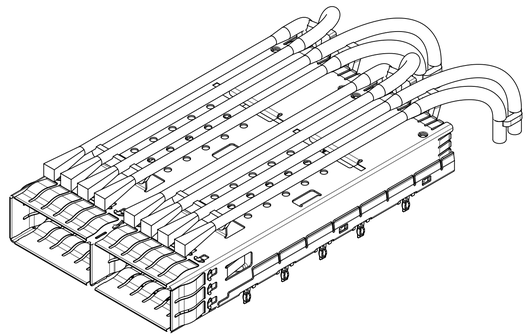

CLOSED TOP WITH LIGHTPIPE

PART NUMBER	PICO-CLASP LOW SPEED LENGTH (MM)	NEARSTACK (GEN 1.0) HIGH SPEED LENGTH (MM)	REMARK
1111312930	75	150	OBSOLETED
1111312931	75	200	OBSOLETED
1111312932	75	300	OBSOLETED
1111312933	75	400	OBSOLETED
1111312934	75	500	OBSOLETED

*SEE SHEET 8 FOR LIGHT PIPE OPTIONS

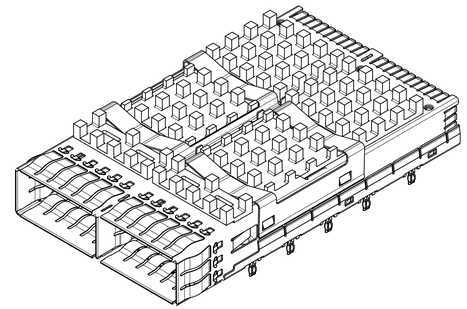

OPEN TOP WITH HEAT SINK

PART NUMBER	PICO-CLASP LOW SPEED LENGTH (MM)	NEARSTACK (GEN 1.0) HIGH SPEED LENGTH (MM)	REMARK
1111312940	75	150	OBSOLETED
1111312941	75	200	OBSOLETED
1111312942	75	300	OBSOLETED
1111312943	75	400	OBSOLETED
1111312944	75	500	OBSOLETED

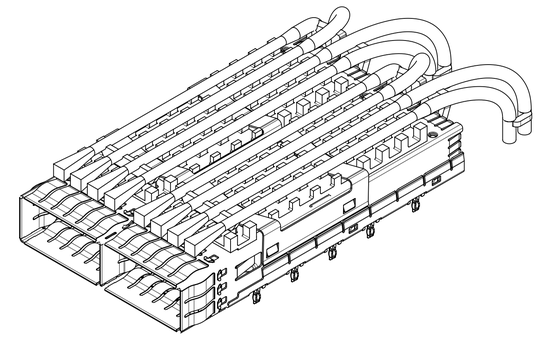

OPEN TOP WITH WITH HEAT SINK AND LIGHTPIPE

PART NUMBER	PICO-CLASP LOW SPEED LENGTH (MM)	NEARSTACK (GEN 1.0) HIGH SPEED LENGTH (MM)	REMARK
1111312911	75	150	OBSOLETED
1111312912	75	200	OBSOLETED
1111312913	75	300	OBSOLETED
1111312914	75	400	OBSOLETED
1111312915	75	500	OBSOLETED

PART NUMBER	PICO-CLASP LOW SPEED LENGTH (MM)	NEARSTACK (GEN 2.0) HIGH SPEED LENGTH (MM)	TOOLING STATUS
1111313060	75	150	UNTOOLED
1111313061	75	200	
1111313062	75	300	
1111313063	75	400	
1111313064	75	500	
1111313065	75	210	

PART NUMBER	PICO-CLASP LOW SPEED LENGTH (MM)	NEARSTACK (GEN 2.0) HIGH SPEED LENGTH (MM)	TOOLING STATUS
1111312970	75	150	UNTOOLED
1111312971	75	200	
1111312972	75	300	
1111312973	75	400	
1111312974	75	500	

*SEE SHEET 8 FOR LIGHT PIPE OPTIONS

PART NUMBER	PICO-CLASP LOW SPEED LENGTH (MM)	NEARSTACK (GEN 2.0) HIGH SPEED LENGTH (MM)	TOOLING STATUS
1111312980	75	150	UNTOOLED
1111312981	75	200	
1111312982	75	300	
1111312983	75	400	
1111312984	75	500	

*SEE SHEET 8 FOR HEAT SINK OPTIONS

PART NUMBER	PICO-CLASP LOW SPEED LENGTH (MM)	NEARSTACK (GEN 2.0) HIGH SPEED LENGTH (MM)	TOOLING STATUS
1111312950	75	150	UNTOOLED
1111312951	75	200	
1111312952	75	300	
1111312953	75	400	
1111312954	75	500	

*SEE SHEET 8 FOR HEAT SINK AND LIGHT PIPE OPTIONS

FUNCTIONAL SYMBOLS: FA = 0, FC = 0, FP = 0

DIVISIONAL SYMBOLS

THIS DRAWING CONTAINS INFORMATION THAT IS PROPRIETARY TO MOLEX ELECTRONIC TECHNOLOGIES, LLC AND SHOULD NOT BE USED WITHOUT WRITTEN PERMISSION

DIMENSION UNITS	SCALE
MM	2:1

GENERAL TOLERANCES (UNLESS SPECIFIED)

ANGULAR TOL	± 0.5°
4 PLACES	±
3 PLACES	±
2 PLACES	± 0.130
1 PLACE	± 0.25
0 PLACES	±

DRAFT WHERE APPLICABLE MUST REMAIN WITHIN DIMENSIONS

CURRENT REV DESC: SEE REVISION TABLE

STATUS: Production
DRWN: KIRAN N 2026-03-30
CHK'D: Roy Liu 2026-06-12
APPR: Bill Chen 2026-07-16

THIRD ANGLE PROJECTION

molex

ENHANCED ZQSFP+ NEARSTACK TO PICO CLASP

PRODUCT CUSTOMER DRAWING

DOCUMENT NUMBER	DOC TYPE	DOC PART	REVISION
1111310799	PSD	000	J2

DRAWING	SERIES	MATERIAL NUMBER	CUSTOMER	SHEET NUMBER
D-SIZE	111131		GENERAL MARKET	3 OF 17

zQSFP BiPASS 1 X 3 CAGE ASSEMBLY

NOTE: ALL LENGTHS ±5.0mm

NOTE : NOT TOOLED - DESIGN ONLY

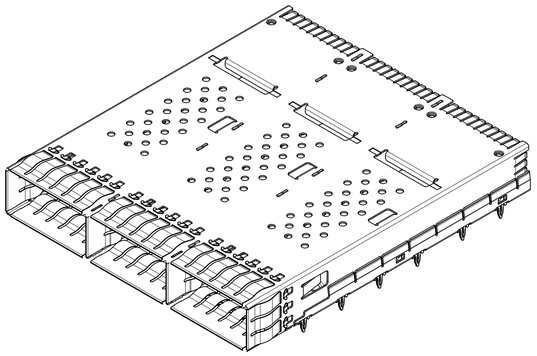

CLOSE TOP

PART NUMBER	PICO-CLASP LOW SPEED LENGTH (MM)	NEARSTACK (GEN 1.0) HIGH SPEED LENGTH (MM)	REMARK
1111313920	75	150	OBSOLETED
1111313921	75	200	OBSOLETED
1111313922	75	300	OBSOLETED
1111313923	75	400	OBSOLETED
1111313924	75	500	OBSOLETED

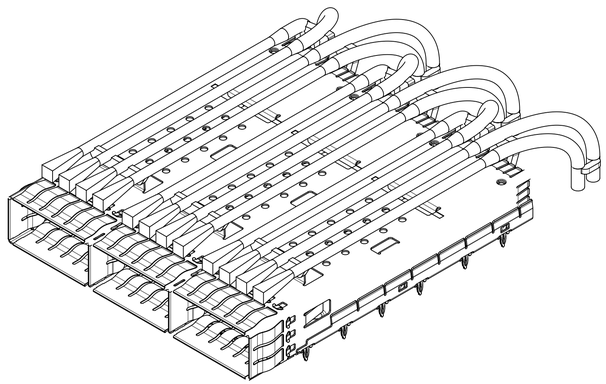

CLOSE TOP WITH LIGHTPIPE

PART NUMBER	PICO-CLASP LOW SPEED LENGTH (MM)	NEARSTACK (GEN 1.0) HIGH SPEED LENGTH (MM)	REMARK
1111313930	75	150	OBSOLETED
1111313931	75	200	OBSOLETED
1111313932	75	300	OBSOLETED
1111313933	75	400	OBSOLETED
1111313944	75	500	OBSOLETED

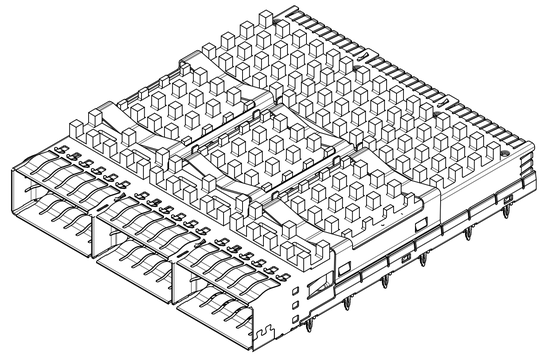

OPEN TOP WITH HEAT SINK

PART NUMBER	PICO-CLASP LOW SPEED LENGTH (MM)	NEARSTACK (GEN 1.0) HIGH SPEED LENGTH (MM)	REMARK
1111313940	75	150	OBSOLETED
1111313941	75	200	OBSOLETED
1111313942	75	300	OBSOLETED
1111313943	75	400	OBSOLETED
1111313944	75	500	OBSOLETED

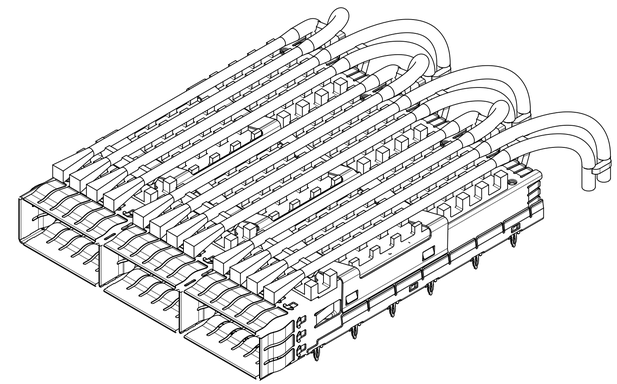

OPEN TOP WITH WITH HEAT SINK AND LIGHTPIPE

PART NUMBER	PICO-CLASP LOW SPEED LENGTH (MM)	NEARSTACK (GEN 1.0) HIGH SPEED LENGTH (MM)	REMARK
1111313911	75	150	OBSOLETED
1111313912	75	200	OBSOLETED
1111313913	75	300	OBSOLETED
1111313914	75	400	OBSOLETED
1111313915	75	500	OBSOLETED

PART NUMBER	PICO-CLASP LOW SPEED LENGTH (MM)	NEARSTACK (GEN 2.0) HIGH SPEED LENGTH (MM)	TOOLING STATUS
1111313960	75	150	UNTOOLED
1111313961	75	200	
1111313962	75	300	
1111313963	75	400	
1111313964	75	500	

PART NUMBER	PICO-CLASP LOW SPEED LENGTH (MM)	NEARSTACK (GEN 2.0) HIGH SPEED LENGTH (MM)	TOOLING STATUS
1111313970	75	150	UNTOOLED
1111313971	75	200	
1111313972	75	300	
1111313973	75	400	
1111313974	75	500	

*SEE SHEET 8 FOR LIGHT PIPE OPTIONS

PART NUMBER	PICO-CLASP LOW SPEED LENGTH (MM)	NEARSTACK (GEN 2.0) HIGH SPEED LENGTH (MM)	TOOLING STATUS
1111313980	75	150	UNTOOLED
1111313981	75	200	
1111313982	75	300	
1111313983	75	400	
1111313984	75	500	

*SEE SHEET 8 FOR HEAT SINK OPTIONS

PART NUMBER	PICO-CLASP LOW SPEED LENGTH (MM)	NEARSTACK (GEN 2.0) HIGH SPEED LENGTH (MM)	TOOLING STATUS
1111313950	75	150	UNTOOLED
1111313951	75	200	
1111313952	75	300	
1111313953	75	400	
1111313954	75	500	

*SEE SHEET 8 FOR HEAT SINK AND LIGHT PIPE OPTIONS

THIS DRAWING CONTAINS INFORMATION THAT IS PROPRIETARY TO MOLEX ELECTRONIC TECHNOLOGIES, LLC AND SHOULD NOT BE USED WITHOUT WRITTEN PERMISSION

FUNCTIONAL SYMBOLS: FA = 0, FC = 0, FP = 0

DIVISIONAL SYMBOLS

DIMENSION UNITS	SCALE
MM	2:1

GENERAL TOLERANCES (UNLESS SPECIFIED)

ANGULAR TOL	± 0.5°
4 PLACES	±
3 PLACES	±
2 PLACES	± 0.130
1 PLACE	± 0.25
0 PLACES	±

DRAFT WHERE APPLICABLE MUST REMAIN WITHIN DIMENSIONS

CURRENT REV DESC: SEE REVISION TABLE

STATUS: Production
DRWN: KIRAN N 2026-03-30
CHK'D: Roy Liu 2026-06-12
APPR: Bill Chen 2026-07-16

THIRD ANGLE PROJECTION | DRAWING: D-SIZE | SERIES: 111131

molex

ENHANCED ZQSFP+ NEARSTACK TO PICO CLASP

PRODUCT CUSTOMER DRAWING

DOCUMENT NUMBER	DOC TYPE	DOC PART	REVISION
1111310799	PSD	000	J2

MATERIAL NUMBER | CUSTOMER: GENERAL MARKET | SHEET NUMBER: 4 OF 17

FORMAT TC-Ascend-C
Date: 2025-Mar-17
Info: 2025-Mar-

zQSFP BiPASS 1 X 4 CAGE ASSEMBLY

NOTE: ALL LENGTHS ±5.0mm

NOTE : NOT TOOLED - DESIGN ONLY

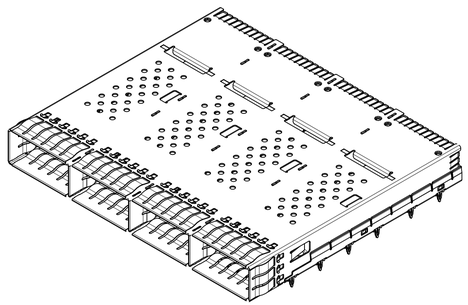

CLOSE TOP

PART NUMBER	PICO-CLASP LOW SPEED LENGTH (MM)	NEARSTACK (GEN 1.0) HIGH SPEED LENGTH (MM)	REMARK
1111314920	75	150	OBSOLETED
1111314921	75	200	OBSOLETED
1111314922	75	300	OBSOLETED
1111314923	75	400	OBSOLETED
1111314924	75	500	OBSOLETED

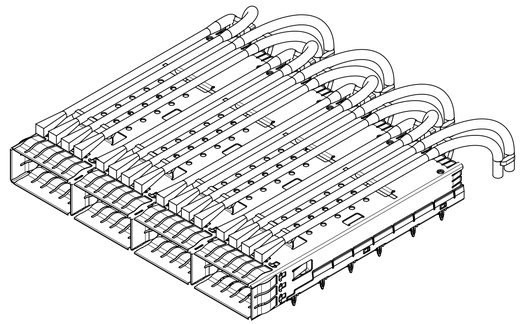

CLOSE TOP WITH LIGHTPIPE

PART NUMBER	PICO-CLASP LOW SPEED LENGTH (MM)	NEARSTACK (GEN 1.0) HIGH SPEED LENGTH (MM)	REMARK
1111314930	75	150	OBSOLETED
1111314931	75	200	OBSOLETED
1111314932	75	300	OBSOLETED
1111314933	75	400	OBSOLETED
1111314934	75	500	OBSOLETED

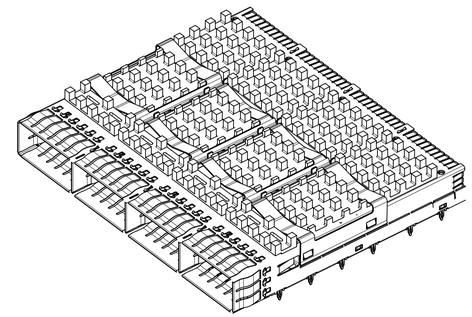

OPEN TOP WITH HEAT SINK

PART NUMBER	PICO-CLASP LOW SPEED LENGTH (MM)	NEARSTACK (GEN 1.0) HIGH SPEED LENGTH (MM)	REMARK
1111314940	75	150	OBSOLETED
1111314941	75	200	OBSOLETED
1111314942	75	300	OBSOLETED
1111314943	75	400	OBSOLETED
1111314944	75	500	OBSOLETED

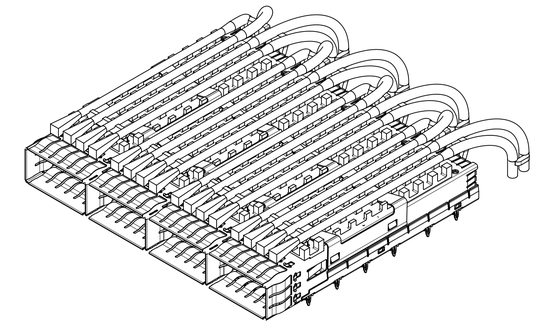

OPEN TOP WITH HEAT SINK AND LIGHTPIPE

PART NUMBER	PICO-CLASP LOW SPEED LENGTH (MM)	NEARSTACK (GEN 1.0) HIGH SPEED LENGTH (MM)	REMARK
1111314911	75	150	OBSOLETED
1111314912	75	200	OBSOLETED
1111314913	75	300	OBSOLETED
1111314914	75	400	OBSOLETED
1111314915	75	500	OBSOLETED

PART NUMBER	PICO-CLASP LOW SPEED LENGTH (MM)	NEARSTACK (GEN 2.0) HIGH SPEED LENGTH (MM)	TOOLING STATUS
1111314960	75	150	UNTOOLED
1111314961	75	200	
1111314962	75	300	
1111314963	75	400	
1111314964	75	500	

PART NUMBER	PICO-CLASP LOW SPEED LENGTH (MM)	NEARSTACK (GEN 2.0) HIGH SPEED LENGTH (MM)	TOOLING STATUS
1111314970	75	150	UNTOOLED
1111314971	75	200	
1111314972	75	300	
1111314973	75	400	
1111314974	75	500	

*SEE SHEET 8 FOR LIGHT PIPE OPTIONS

PART NUMBER	PICO-CLASP LOW SPEED LENGTH (MM)	NEARSTACK (GEN 2.0) HIGH SPEED LENGTH (MM)	TOOLING STATUS
1111314980	75	150	UNTOOLED
1111314981	75	200	
1111314982	75	300	
1111314983	75	400	
1111314984	75	500	

*SEE SHEET 8 FOR HEAT SINK OPTIONS

PART NUMBER	PICO-CLASP LOW SPEED LENGTH (MM)	NEARSTACK (GEN 2.0) HIGH SPEED LENGTH (MM)	TOOLING STATUS
1111314950	75	150	UNTOOLED
1111314951	75	200	
1111314952	75	300	
1111314953	75	400	
1111314954	75	500	

*SEE SHEET 8 FOR HEAT SINK AND LIGHT PIPE OPTIONS

FUNCTIONAL SYMBOLS: FA = 0, FC = 0, FP = 0

DIVISIONAL SYMBOLS

THIS DRAWING CONTAINS INFORMATION THAT IS PROPRIETARY TO MOLEX ELECTRONIC TECHNOLOGIES, LLC AND SHOULD NOT BE USED WITHOUT WRITTEN PERMISSION

DIMENSION UNITS	SCALE
MM	2:1

GENERAL TOLERANCES (UNLESS SPECIFIED)

ANGULAR TOL	± 0.5°
4 PLACES	±
3 PLACES	±
2 PLACES	± 0.130
1 PLACE	± 0.25
0 PLACES	±

DRAFT WHERE APPLICABLE MUST REMAIN WITHIN DIMENSIONS

CURRENT REV DESC: SEE REVISION TABLE

STATUS: Production

DRWN:	KIRAN N	2026-03-30
CHK'D:	Roy Liu	2026-06-12
APPR:	Bill Chen	2026-07-16

THIRD ANGLE PROJECTION

molex

ENHANCED ZQSFP+ NEARSTACK TO PICO CLASP

PRODUCT CUSTOMER DRAWING

DRAWING	SERIES	MATERIAL NUMBER	CUSTOMER	SHEET NUMBER
D-SIZE	111131		GENERAL MARKET	5 OF 17

DOCUMENT NUMBER	DOC TYPE	DOC PART	REVISION
1111310799	PSD	000	J2

FORMAT TC-Alpha42
REVISION: B
DATE: 2020-06-01

zQSFP BiPASS 1 X 5 CAGE ASSEMBLY

NOTE: ALL LENGTHS ±5.0mm

NOTE : NOT TOOLED - DESIGN ONLY

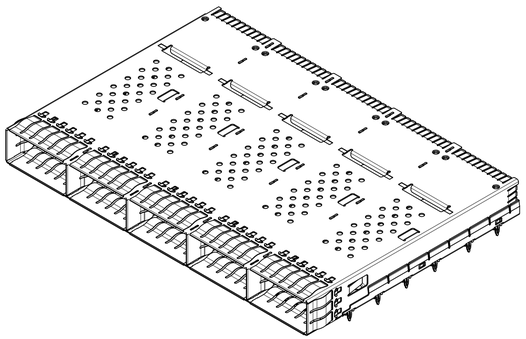

CLOSE TOP

PART NUMBER	PICO-CLASP LOW SPEED LENGTH (MM)	NEARSTACK (GEN 1.0) HIGH SPEED LENGTH (MM)	REMARK
1111315920	75	150	OBSOLETED
1111315921	75	200	OBSOLETED
1111315922	75	300	OBSOLETED
1111315923	75	400	OBSOLETED
1111315924	75	500	OBSOLETED

PART NUMBER	PICO-CLASP LOW SPEED LENGTH (MM)	NEARSTACK (GEN 2.0) HIGH SPEED LENGTH (MM)	TOOLING STATUS
1111315960	75	150	UNTOOLED
1111315961	75	200	
1111315962	75	300	
1111315963	75	400	
1111315964	75	500	

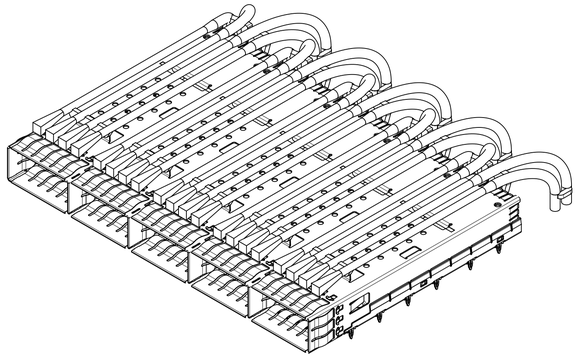

CLOSE TOP WITH LIGHTPIPE

PART NUMBER	PICO-CLASP LOW SPEED LENGTH (MM)	NEARSTACK (GEN 1.0) HIGH SPEED LENGTH (MM)	REMARK
1111315930	75	150	OBSOLETED
1111315931	75	200	OBSOLETED
1111315932	75	300	OBSOLETED
1111315933	75	400	OBSOLETED
1111315934	75	500	OBSOLETED

PART NUMBER	PICO-CLASP LOW SPEED LENGTH (MM)	NEARSTACK (GEN 2.0) HIGH SPEED LENGTH (MM)	TOOLING STATUS
1111315970	75	150	UNTOOLED
1111315971	75	200	
1111315972	75	300	
1111315973	75	400	
1111315974	75	500	

*SEE SHEET 8 FOR LIGHT PIPE OPTIONS

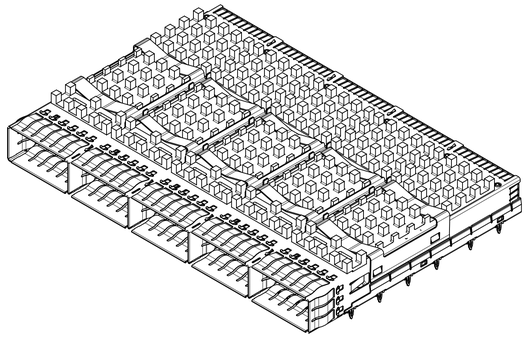

OPEN TOP WITH HEAT SINK

PART NUMBER	PICO-CLASP LOW SPEED LENGTH (MM)	NEARSTACK (GEN 1.0) HIGH SPEED LENGTH (MM)	REMARK
1111315940	75	150	OBSOLETED
1111315941	75	200	OBSOLETED
1111315942	75	300	OBSOLETED
1111315943	75	400	OBSOLETED
1111315944	75	500	OBSOLETED

PART NUMBER	PICO-CLASP LOW SPEED LENGTH (MM)	NEARSTACK (GEN 2.0) HIGH SPEED LENGTH (MM)	TOOLING STATUS
1111315980	75	150	UNTOOLED
1111315981	75	200	
1111315982	75	300	
1111315983	75	400	
1111315984	75	500	

*SEE SHEET 8 FOR HEAT SINK OPTIONS

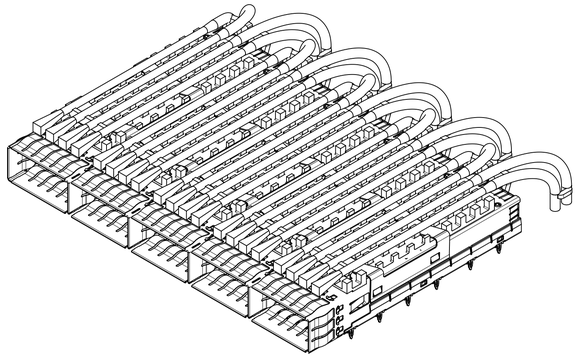

OPEN TOP WITH HEAT SINK AND LIGHTPIPE

PART NUMBER	PICO-CLASP LOW SPEED LENGTH (MM)	NEARSTACK (GEN 1.0) HIGH SPEED LENGTH (MM)	REMARK
1111315911	75	150	OBSOLETED
1111315912	75	200	OBSOLETED
1111315913	75	300	OBSOLETED
1111315914	75	400	OBSOLETED
1111315915	75	500	OBSOLETED

PART NUMBER	PICO-CLASP LOW SPEED LENGTH (MM)	NEARSTACK (GEN 2.0) HIGH SPEED LENGTH (MM)	TOOLING STATUS
1111315950	75	150	UNTOOLED
1111315951	75	200	
1111315952	75	300	
1111315953	75	400	
1111315954	75	500	

*SEE SHEET 8 FOR HEAT SINK AND LIGHT PIPE OPTIONS

THIS DRAWING CONTAINS INFORMATION THAT IS PROPRIETARY TO MOLEX ELECTRONIC TECHNOLOGIES, LLC AND SHOULD NOT BE USED WITHOUT WRITTEN PERMISSION

FUNCTIONAL SYMBOLS: FA = 0, FC = 0, FP = 0

DIVISIONAL SYMBOLS

DIMENSION UNITS: MM | SCALE: 2:1

GENERAL TOLERANCES (UNLESS SPECIFIED)

ANGULAR TOL	± 0.5°
4 PLACES	±
3 PLACES	±
2 PLACES	± 0.130
1 PLACE	± 0.25
0 PLACES	±

DRAFT WHERE APPLICABLE MUST REMAIN WITHIN DIMENSIONS

CURRENT REV DESC: SEE REVISION TABLE

STATUS: Production

DRWN:	KIRAN N	2026-03-30
CHK'D:	Roy Liu	2026-06-12
APPR:	Bill Chen	2026-07-16

THIRD ANGLE PROJECTION | DRAWING: D-SIZE | SERIES: 111131

molex

ENHANCED ZQSFP+ NEARSTACK TO PICO CLASP

PRODUCT CUSTOMER DRAWING

DOCUMENT NUMBER	DOC TYPE	DOC PART	REVISION
1111310799	PSD	000	J2

MATERIAL NUMBER | CUSTOMER: GENERAL MARKET | SHEET NUMBER: 6 OF 17

FORMAT TC-Engineer42-
REVISION: B
DATE: 2022/08/01

zQSFP BiPASS 1 X 6 CAGE ASSEMBLY

NOTE: ALL LENGTHS ±5.0mm

NOTE : NOT TOOLED - DESIGN ONLY

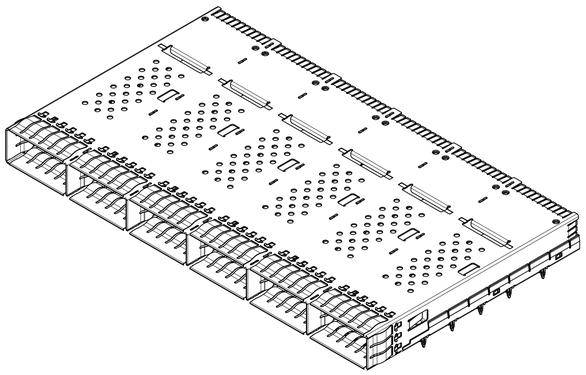

CLOSE TOP

PART NUMBER	PICO-CLASP LOW SPEED LENGTH (MM)	NEARSTACK (GEN 1.0) HIGH SPEED LENGTH (MM)	REMARK
1111316920	75	150	OBSOLETED
1111316921	75	200	OBSOLETED
1111316922	75	300	OBSOLETED
1111316923	75	400	OBSOLETED
1111316924	75	500	OBSOLETED

PART NUMBER	PICO-CLASP LOW SPEED LENGTH (MM)	NEARSTACK (GEN 2.0) HIGH SPEED LENGTH (MM)	TOOLING STATUS
1111316960	75	150	UNTOOLED
1111316961	75	200	
1111316962	75	300	
1111316963	75	400	
1111316964	75	500	

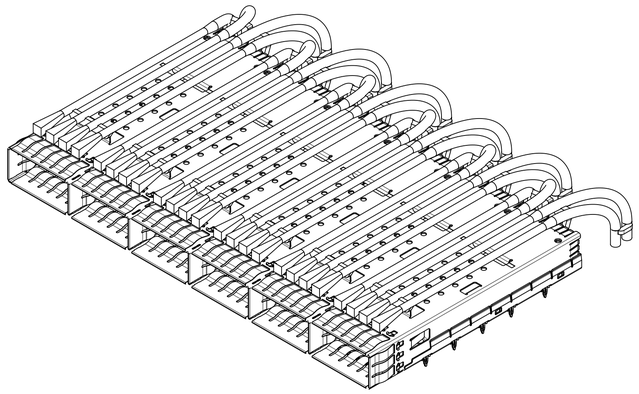

CLOSE TOP WITH LIGHTPIPE

PART NUMBER	PICO-CLASP LOW SPEED LENGTH (MM)	NEARSTACK (GEN 1.0) HIGH SPEED LENGTH (MM)	REMARK
1111316930	75	150	OBSOLETED
1111316931	75	200	OBSOLETED
1111316932	75	300	OBSOLETED
1111316933	75	400	OBSOLETED
1111316934	75	500	OBSOLETED

PART NUMBER	PICO-CLASP LOW SPEED LENGTH (MM)	NEARSTACK (GEN 2.0) HIGH SPEED LENGTH (MM)	TOOLING STATUS
1111316970	75	150	UNTOOLED
1111316971	75	200	
1111316972	75	300	
1111316973	75	400	
1111316974	75	500	

*SEE SHEET 8 FOR LIGHT PIPE OPTIONS

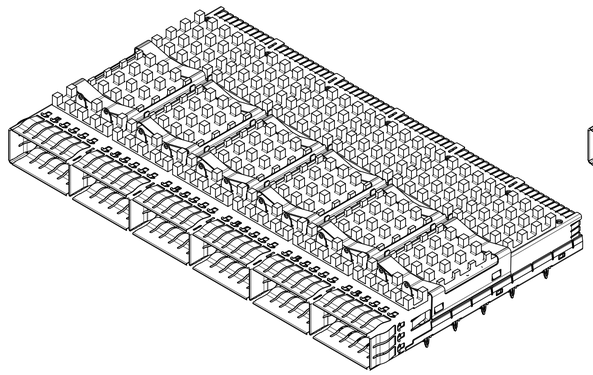

OPEN TOP WITH HEAT SINK

PART NUMBER	PICO-CLASP LOW SPEED LENGTH (MM)	NEARSTACK (GEN 1.0) HIGH SPEED LENGTH (MM)	REMARK
1111316940	75	150	OBSOLETED
1111316941	75	200	OBSOLETED
1111316942	75	300	OBSOLETED
1111316943	75	400	OBSOLETED
1111316944	75	500	OBSOLETED

PART NUMBER	PICO-CLASP LOW SPEED LENGTH (MM)	NEARSTACK (GEN 2.0) HIGH SPEED LENGTH (MM)	TOOLING STATUS
1111316980	75	150	UNTOOLED
1111316981	75	200	
1111316982	75	300	
1111316983	75	400	
1111316984	75	500	

*SEE SHEET 8 FOR HEAT SINK OPTIONS

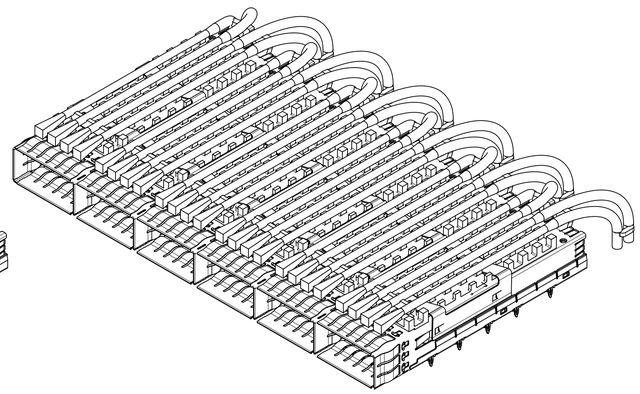

OPEN TOP WITH HEAT SINK AND LIGHTPIPE

PART NUMBER	PICO-CLASP LOW SPEED LENGTH (MM)	NEARSTACK (GEN 1.0) HIGH SPEED LENGTH (MM)	REMARK
1111316911	75	150	OBSOLETED
1111316912	75	200	OBSOLETED
1111316913	75	300	OBSOLETED
1111316914	75	400	OBSOLETED
1111316915	75	500	OBSOLETED

PART NUMBER	PICO-CLASP LOW SPEED LENGTH (MM)	NEARSTACK (GEN 2.0) HIGH SPEED LENGTH (MM)	TOOLING STATUS
1111316950	75	150	UNTOOLED
1111316951	75	200	
1111316952	75	300	
1111316953	75	400	
1111316954	75	500	

*SEE SHEET 8 FOR HEAT SINK AND LIGHT PIPE OPTIONS

THIS DRAWING CONTAINS INFORMATION THAT IS PROPRIETARY TO MOLEX ELECTRONIC TECHNOLOGIES, LLC AND SHOULD NOT BE USED WITHOUT WRITTEN PERMISSION

FUNCTIONAL SYMBOLS: FA = 0, FC = 0, FP = 0

DIVISIONAL SYMBOLS

DIMENSION UNITS	SCALE
MM	2:1

GENERAL TOLERANCES (UNLESS SPECIFIED)

ANGULAR TOL	± 0.5°
4 PLACES	±
3 PLACES	±
2 PLACES	± 0.130
1 PLACE	± 0.25
0 PLACES	±

DRAFT WHERE APPLICABLE MUST REMAIN WITHIN DIMENSIONS

CURRENT REV DESC: SEE REVISION TABLE

STATUS: Production

DRWN:	KIRAN N	2026-03-30
CHK'D:	Roy Liu	2026-06-12
APPR:	Bill Chen	2026-07-16

THIRD ANGLE PROJECTION | DRAWING: D-SIZE | SERIES: 111131

molex

ENHANCED ZQSFP+ NEARSTACK TO PICO CLASP

PRODUCT CUSTOMER DRAWING

DOCUMENT NUMBER	DOC TYPE	DOC PART	REVISION
1111310799	PSD	000	J2

MATERIAL NUMBER | CUSTOMER: GENERAL MARKET | SHEET NUMBER: 7 OF 17

FORMAT TLAQA4V2
REVISION: B
DATE: 2020-06-01

STANDARD HEAT SINK USED ON ASSEMBLIES SHOWN IN THIS DRAWING

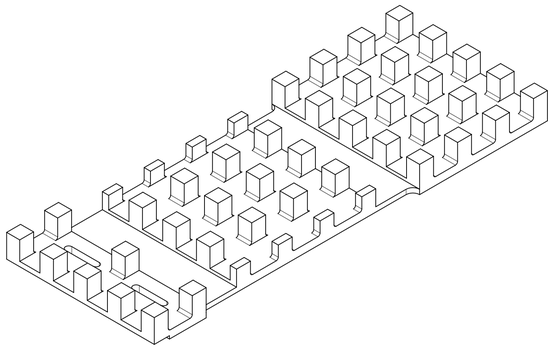

HEAT SINK PIN TYPE
HEIGHT = 3.1MM
(PCI)

HEAT SINK OPTIONS

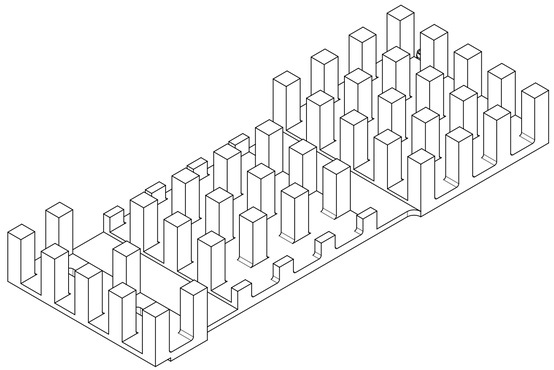

HEAT SINK PIN TYPE
HEIGHT = 5.4MM
(SAN)

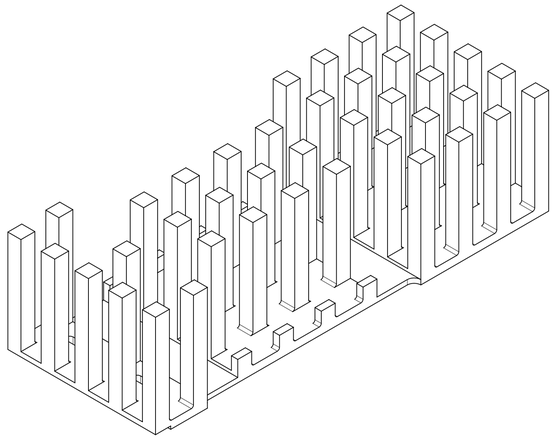

HEAT SINK PIN TYPE
HEIGHT = 12.4MM
(NET)

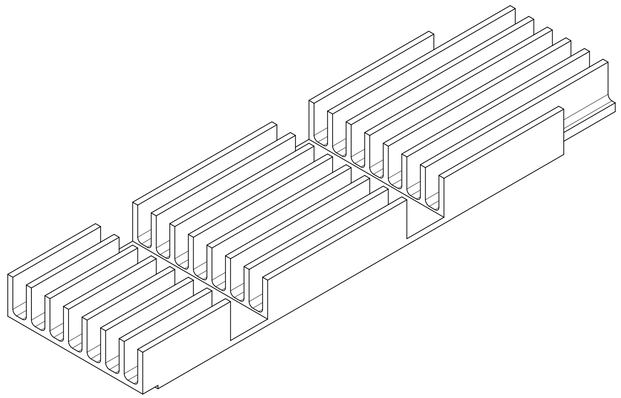

HEAT SINK FIN TYPE
HEIGHT = 3.7MM

STANDARD LIGHT PIPE USED ON ASSEMBLIES SHOWN IN THIS DRAWING

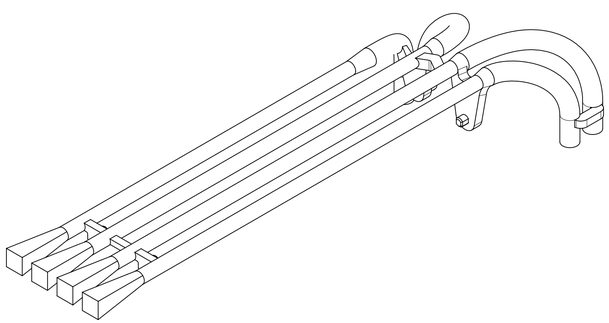

LIGHT PIPE
4 CHANNEL

LIGHT PIPE OPTIONS

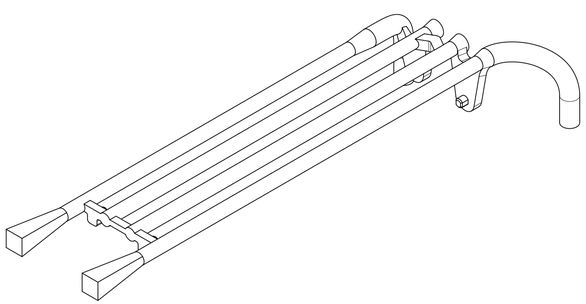

LIGHT PIPE
2 CHANNEL

CONTACT MOLEX FOR BiPASS ASSEMBLY PART NUMBER AND AVAILABILITY

FUNCTIONAL SYMBOLS	THIS DRAWING CONTAINS INFORMATION THAT IS PROPRIETARY TO MOLEX ELECTRONIC TECHNOLOGIES, LLC AND SHOULD NOT BE USED WITHOUT WRITTEN PERMISSION			
FA = 0	DIMENSION UNITS: MM	SCALE: 4:1	CURRENT REV DESC: SEE REVISION TABLE	molex
FC = 0	GENERAL TOLERANCES (UNLESS SPECIFIED)			ENHANCED ZQSFP+ NEARSTACK TO PICO CLASP
FP = 0	ANGULAR TOL ± 0.5°			
DIVISIONAL SYMBOLS	4 PLACES ±			PRODUCT CUSTOMER DRAWING
	3 PLACES ±		STATUS: Production	
	2 PLACES ± 0.130		DRWN: KIRAN N 2026-03-30	DOCUMENT NUMBER: 1111310799 / DOC TYPE: PSD / DOC PART: 000 / REVISION: J2
	1 PLACE ± 0.25		CHK'D: Roy Liu 2026-06-12	
	0 PLACES ±		APPR: Bill Chen 2026-07-16	
	DRAFT WHERE APPLICABLE MUST REMAIN WITHIN DIMENSIONS	THIRD ANGLE PROJECTION	DRAWING: D-SIZE / SERIES: 111131	MATERIAL NUMBER / CUSTOMER: GENERAL MARKET / SHEET NUMBER: 8 OF 17

FORMAT TC(Alpha)0
REVISION: B
DATE: 2020/06/01

P1 QSFP
HIGH/LOW SPEED

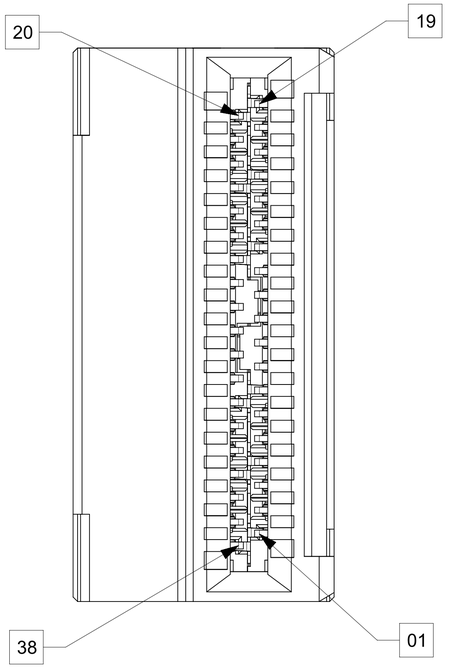

P2 NEARSTACK
HIGH SPEED

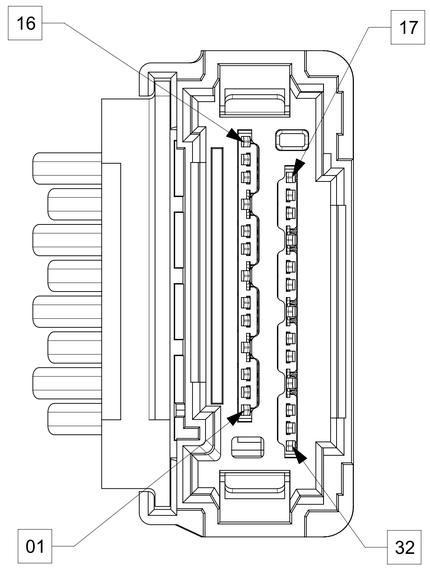

P3 PICO-CLASP
LOW SPEED

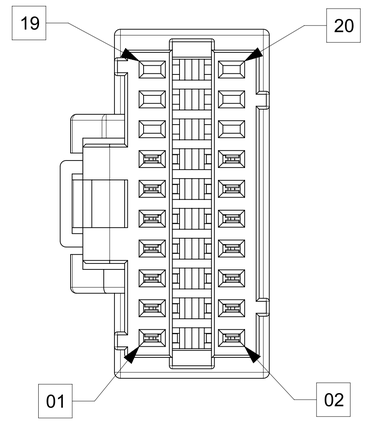

LOW SPEED SIGNALS		
P1		P3
PIN	SIGNAL	PIN
	NC	20
	NC	18
	NC	16
32, 35, 38	GND	14
08	ModSelL	12
09	ResetL	10
10	VccRx	08
11	SCL	06
12	SDA	04
13, 16, 19	GND	02
20, 23, 26	GND	01
27	ModPrsL	03
28	IntL	05
29	VccTx	07
30	Vcc1	09
31	LPMode	11
1, 4, 7	GND	13
	NC	15
	NC	17
	NC	19

HIGH SPEED WIRING DIAGRAM				
P1 END zQSFP			P2 END NEARSTACK	
PIN	SIGNAL		PIN	SIGNAL
01	GND (TX)		01	GND
02	TX2n		02	TX2p
03	TX2p		03	TX2n
04	GND (TX)		04, 05	GND
05	TX4n		06	TX4p
06	TX4p		07	TX4n
07	GND (TX)		08	GND
13	GND (RX)		09	GND
14	RX3p		10	RX3n
15	RX3n		11	RX3p
16	GND (RX)		12, 13	GND
17	RX1p		14	RX1n
18	RX1n		15	RX1p
19	GND (RX)		16	GND
20	GND (RX)		17	GND
21	RX2n		18	RX2n
22	RX2p		19	RX2p
23	GND (RX)		20, 21	GND
24	RX4n		22	RX4n
25	RX4p		23	RX4p
26	GND (RX)		24	GND
32	GND (TX)		25	GND
33	TX3p		26	TX3p
34	TX3n		27	TX3n
35	GND (TX)		28, 29	GND
36	TX1p		30	TX1p
37	TX1n		31	TX1n
38	GND (TX)		32	GND

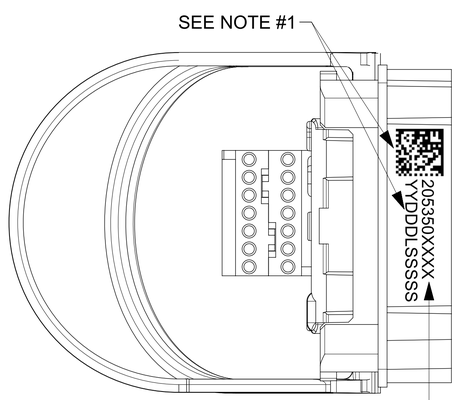

NOTE:
1. MARK WITH PART NUMBER SERIAL NUMBER
PART NUMBER: SEE PART NUMBER TABLE
SERIAL NUMBER:
YY - YEAR
DDD - DAY OF THE YEAR
L - MANUFACTURE LOCATION
SSSSS - SERIAL NUMBER (00001- 99999)

THIS DRAWING CONTAINS INFORMATION THAT IS PROPRIETARY TO MOLEX ELECTRONIC TECHNOLOGIES, LLC AND SHOULD NOT BE USED WITHOUT WRITTEN PERMISSION

FUNCTIONAL SYMBOLS
EA = 0
EC = 0
EP = 0
DIVISIONAL SYMBOLS

DIMENSION UNITS	SCALE
MM	10:1

GENERAL TOLERANCES (UNLESS SPECIFIED)

ANGULAR TOL	±	0.5°
4 PLACES	±	
3 PLACES	±	
2 PLACES	±	0.130
1 PLACE	±	0.25
0 PLACES	±	

DRAFT WHERE APPLICABLE MUST REMAIN WITHIN DIMENSIONS

CURRENT REV DESC: SEE REVISION TABLE

STATUS: Production
DRWN: KIRAN N 2026-03-30
CHK'D: Roy Liu 2026-06-12
APPR: Bill Chen 2026-07-16

THIRD ANGLE PROJECTION | DRAWING: D-SIZE | SERIES: 111131

molex

ENHANCED ZQSFP+ NEARSTACK TO PICO CLASP

PRODUCT CUSTOMER DRAWING

DOCUMENT NUMBER	DOC TYPE	DOC PART	REVISION
1111310799	PSD	000	J2

MATERIAL NUMBER | CUSTOMER: GENERAL MARKET | SHEET NUMBER: 9 OF 17

FORMAT: 12-Byte(v02)
REVISION: B
UNIT: 203398001

PCB LAYOUT FOR SINGLE SIDED MOUNTING

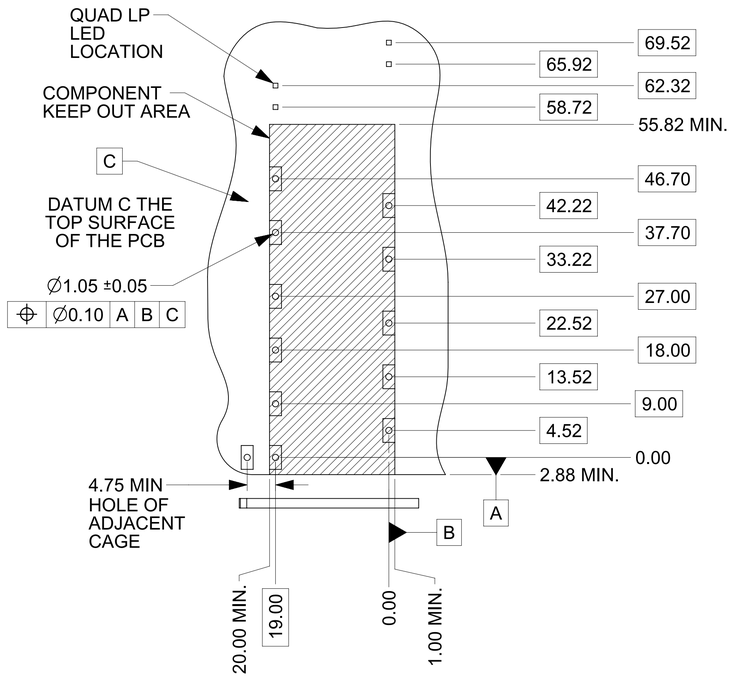

1X1 PCB LAYOUT

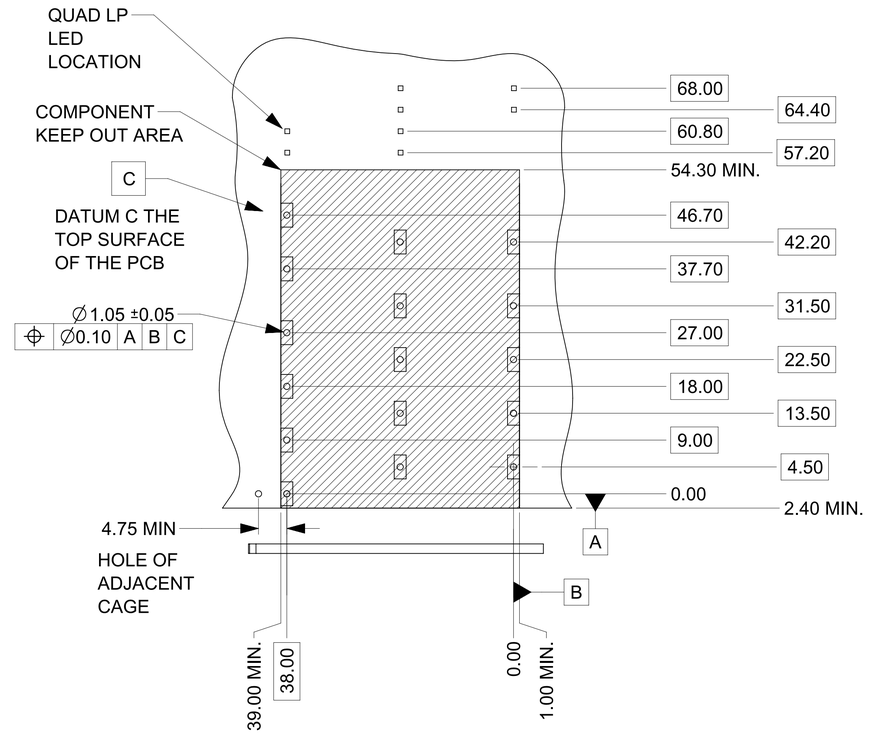

1X2 PCB LAYOUT

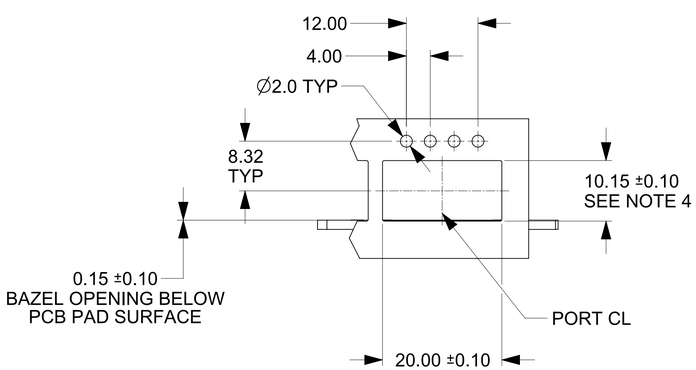

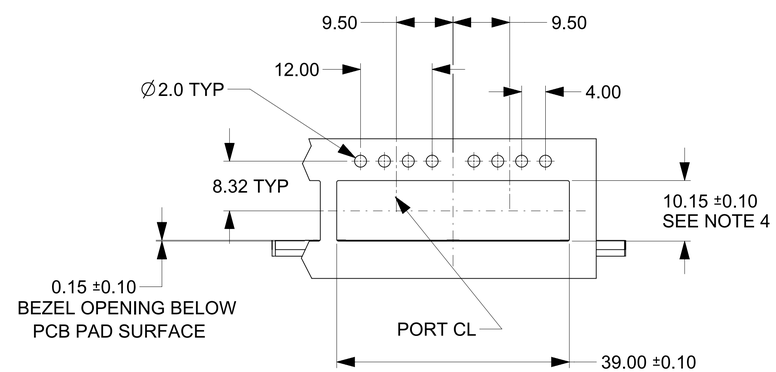

NOTES:
1. PADS AND VIAS GO TO CHASSIS GROUND. (RECOMMENDED PADS TO BE 2.0MM - 4.0mm SQUARE)
2. RECOMMENDED THRU HOLE PLATING INCLUDES HASL, OSP, OR IMMERSION Au, Ag OR Sn.
3. HOLE PATTERN REPEATS FOR EACH PORT. SPACING BETWEEN PORTS IS 19.00MM.
4. PCB THICKNESS VARIATION MUST BE CONSIDERED WHEN DETERMINING BEZEL OPENING, SIZE AND LOCATION.

THIS DRAWING CONTAINS INFORMATION THAT IS PROPRIETARY TO MOLEX ELECTRONIC TECHNOLOGIES, LLC AND SHOULD NOT BE USED WITHOUT WRITTEN PERMISSION

FUNCTIONAL SYMBOLS	DIMENSION UNITS: MM	SCALE: 2:1	CURRENT REV DESC: SEE REVISION TABLE
FA = 0	GENERAL TOLERANCES (UNLESS SPECIFIED)		
FC = 0	ANGULAR TOL ± 0.5°		
FP = 0	4 PLACES ±		
DIVISIONAL SYMBOLS	3 PLACES ±		
	2 PLACES ± 0.130		STATUS: Production
	1 PLACE ± 0.25		DRWN: KIRAN N 2026-03-30
	0 PLACES ±		CHK'D: Roy Liu 2026-06-12
	DRAFT WHERE APPLICABLE MUST REMAIN WITHIN DIMENSIONS		APPR: Bill Chen 2026-07-16

THIRD ANGLE PROJECTION | DRAWING: D-SIZE | SERIES: 111131

molex

ENHANCED ZQSFP+ NEARSTACK TO PICO CLASP

PRODUCT CUSTOMER DRAWING

DOCUMENT NUMBER	DOC TYPE	DOC PART	REVISION
1111310799	PSD	000	J2

MATERIAL NUMBER	CUSTOMER	SHEET NUMBER
	GENERAL MARKET	10 OF 17

PCB LAYOUT FOR SINGLE SIDED MOUNTING

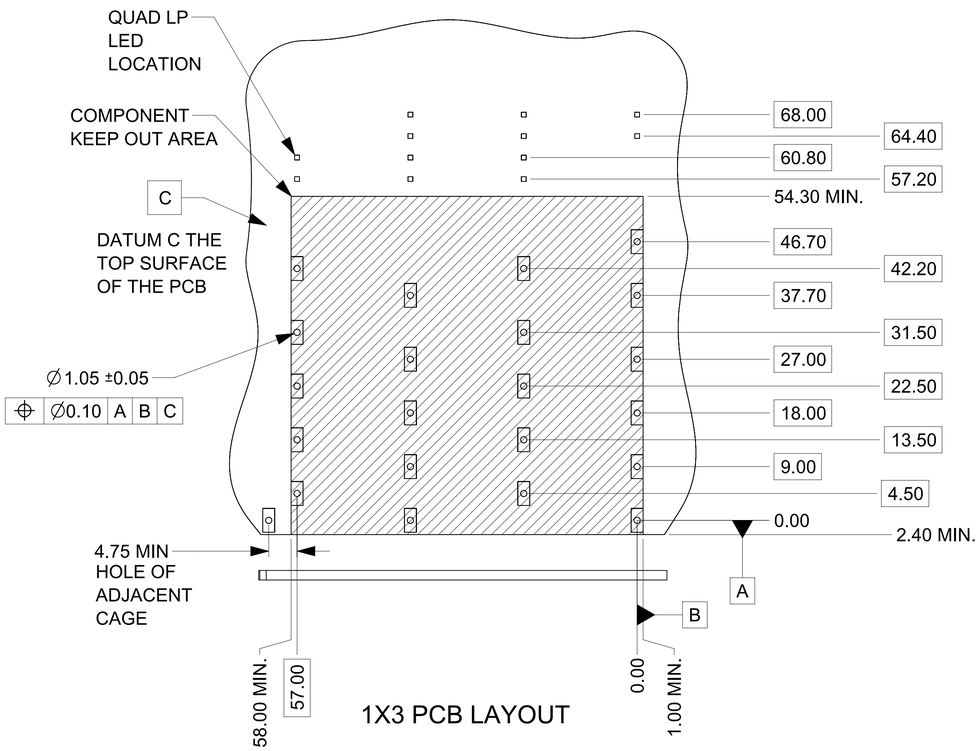

1X3 PCB LAYOUT

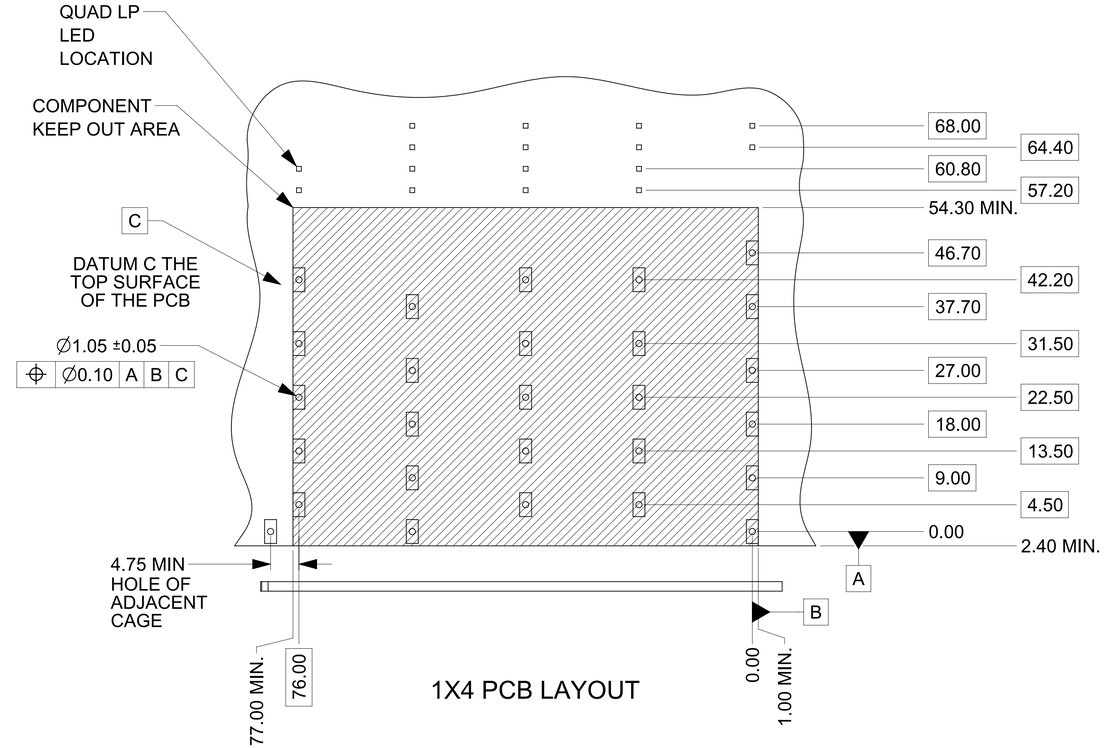

1X4 PCB LAYOUT

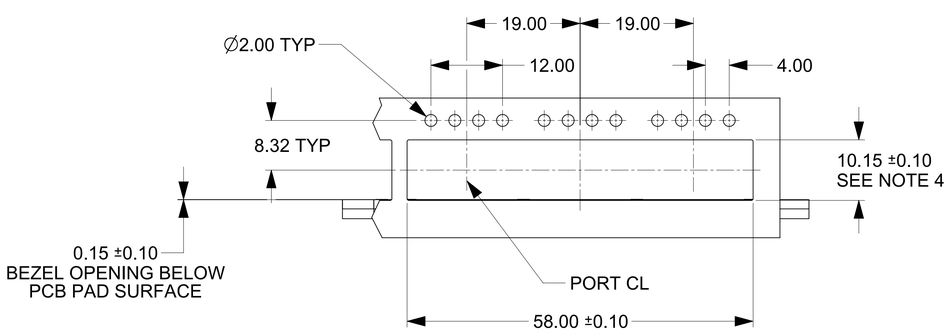

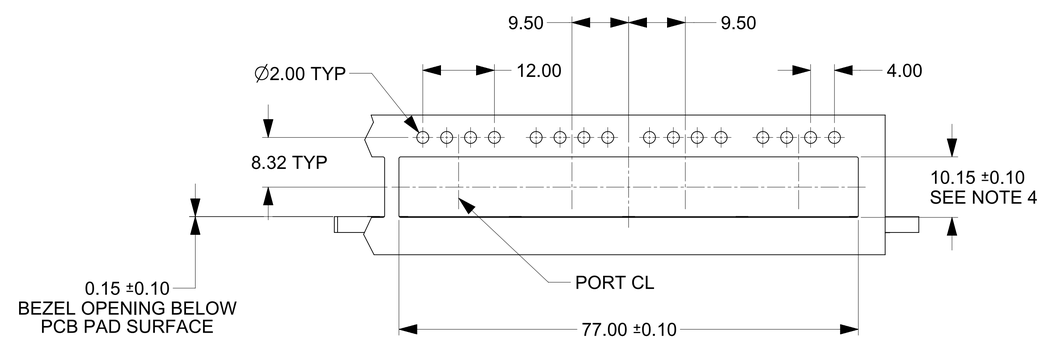

NOTES:
1. PADS AND VIAS GO TO CHASSIS GROUND. (RECOMMENDED PADS TO BE 2.0MM - 4.0MM SQUARE)
2. RECOMMENDED THRU HOLE PLATING INCLUDES HASL, OSP, OR IMMERSION Au, Ag OR Sn.
3. HOLE PATTERN REPEATS FOR EACH PORT. SPACING BETWEEN PORTS IS 19.00MM.
4. PCB THICKNESS VARIATION MUST BE CONSIDERED WHEN DETERMINING BEZEL OPENING, SIZE AND LOCATION.

THIS DRAWING CONTAINS INFORMATION THAT IS PROPRIETARY TO MOLEX ELECTRONIC TECHNOLOGIES, LLC AND SHOULD NOT BE USED WITHOUT WRITTEN PERMISSION

FUNCTIONAL SYMBOLS	DIMENSION UNITS: MM	SCALE: 2:1	CURRENT REV DESC: SEE REVISION TABLE
FA = 0	GENERAL TOLERANCES (UNLESS SPECIFIED)		
FC = 0	ANGULAR TOL ± 0.5°		
FP = 0	4 PLACES ±		
DIVISIONAL SYMBOLS	3 PLACES ±		STATUS: Production
	2 PLACES ± 0.130		DRWN: KIRAN N 2026-03-30
	1 PLACE ± 0.25		CHK'D: Roy Liu 2026-06-12
	0 PLACES ±		APPR: Bill Chen 2026-07-16
	DRAFT WHERE APPLICABLE MUST REMAIN WITHIN DIMENSIONS	THIRD ANGLE PROJECTION	DRAWING: D-SIZE / SERIES: 111131

molex

ENHANCED ZQSFP+ NEARSTACK TO PICO CLASP

PRODUCT CUSTOMER DRAWING

DOCUMENT NUMBER	DOC TYPE	DOC PART	REVISION
1111310799	PSD	000	J2

MATERIAL NUMBER	CUSTOMER	SHEET NUMBER
	GENERAL MARKET	11 OF 17

PCB LAYOUT FOR SINGLE SIDED MOUNTING

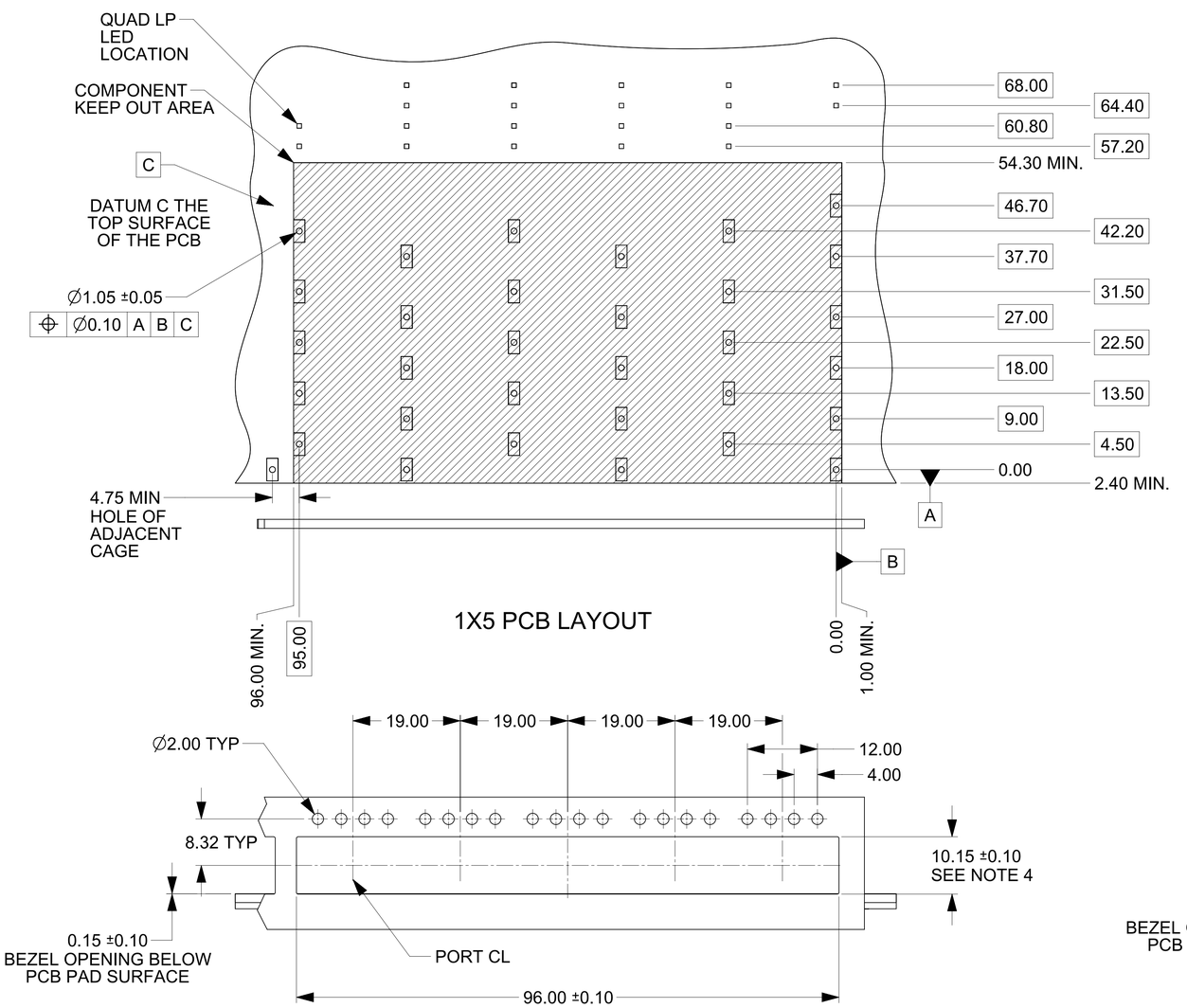

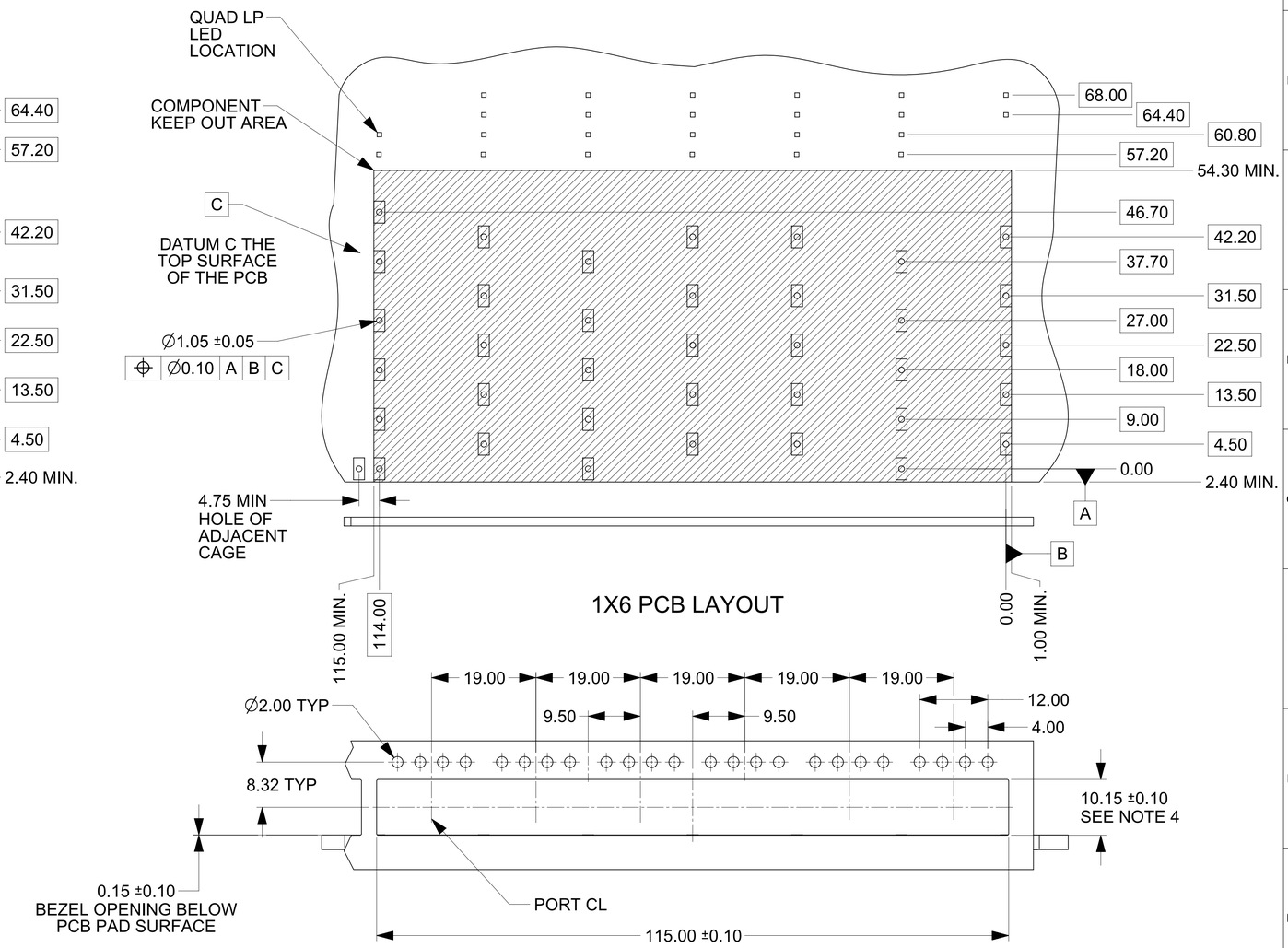

NOTES:
1. PADS AND VIAS GO TO CHASSIS GROUND. (RECOMMENDED PADS TO BE 2.0MM X 4.0MM SQUARE)
2. RECOMMENDED THRU HOLE PLATING INCLUDES HASL, OSP, OR IMMERSION Au, Ag OR Sn.
3. HOLE PATTERN REPEATS FOR EACH PORT. SPACING BETWEEN PORTS IS 19.00MM.
4. PCB THICKNESS VARIATION MUST BE CONSIDERED WHEN DETERMINING BEZEL OPENING, SIZE AND LOCATION.

THIS DRAWING CONTAINS INFORMATION THAT IS PROPRIETARY TO MOLEX ELECTRONIC TECHNOLOGIES, LLC AND SHOULD NOT BE USED WITHOUT WRITTEN PERMISSION

FUNCTIONAL SYMBOLS	DIMENSION UNITS: MM	SCALE: 2:1	CURRENT REV DESC: SEE REVISION TABLE
= 0	GENERAL TOLERANCES (UNLESS SPECIFIED)		
= 0	ANGULAR TOL ± 0.5°		
= 0	4 PLACES ±		
DIVISIONAL SYMBOLS	3 PLACES ±		
	2 PLACES ± 0.130		STATUS: Production
	1 PLACE ± 0.25		DRWN: KIRAN N 2026-03-30
	0 PLACES ±		CHK'D: Roy Liu 2026-06-12
	DRAFT WHERE APPLICABLE MUST REMAIN WITHIN DIMENSIONS		APPR: Bill Chen 2026-07-16

THIRD ANGLE PROJECTION | DRAWING: D-SIZE | SERIES: 111131

molex

ENHANCED ZQSFP+ NEARSTACK TO PICO CLASP

PRODUCT CUSTOMER DRAWING

DOCUMENT NUMBER	DOC TYPE	DOC PART	REVISION
1111310799	PSD	000	J2

MATERIAL NUMBER	CUSTOMER	SHEET NUMBER
	GENERAL MARKET	12 OF 17

PCB LAYOUT FOR BELLY TO BELLY MOUNTING

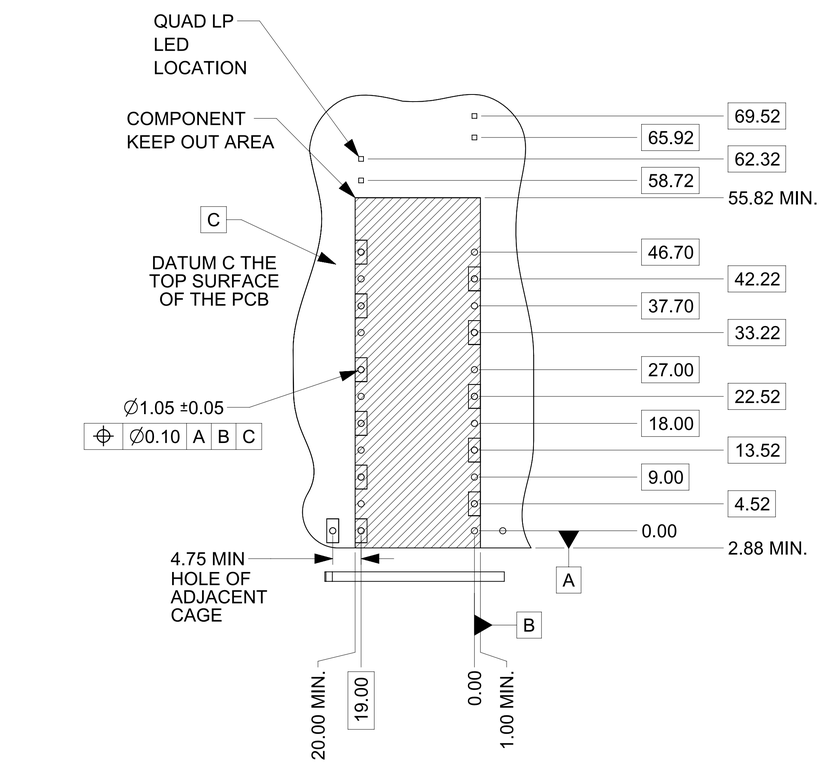

1X1 PCB LAYOUT

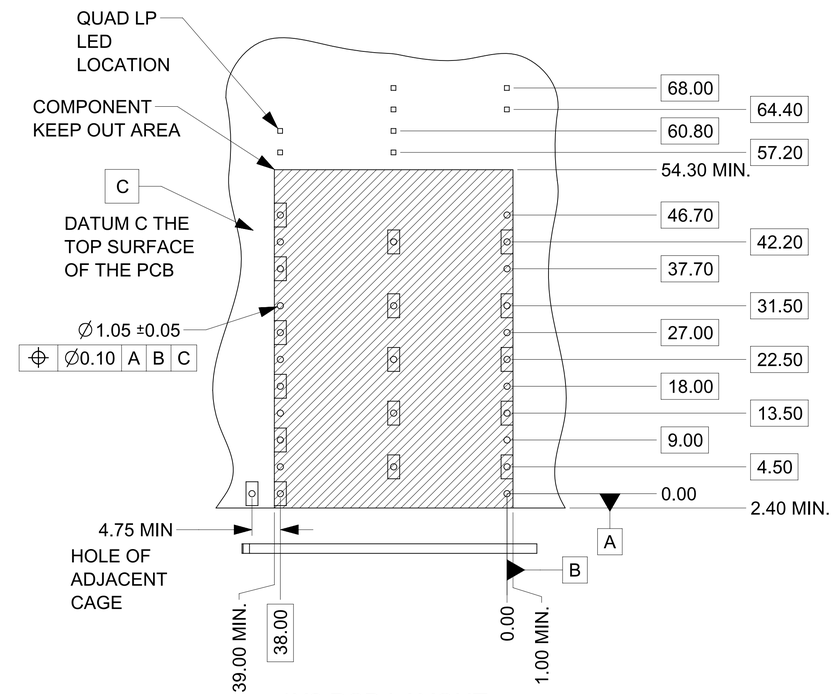

1X2 PCB LAYOUT

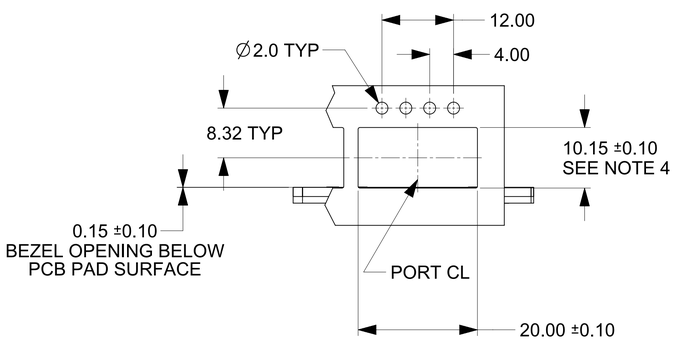

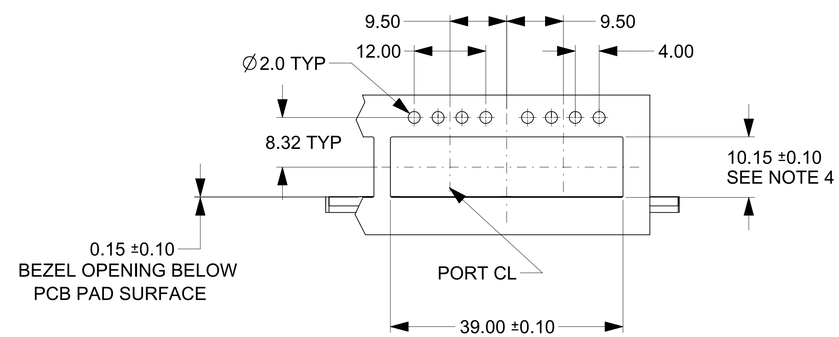

NOTES:
1. PADS AND VIAS GO TO CHASSIS GROUND. (RECOMMENDED PADS TO BE 2.0MM X 4.0MM SQUARE)
2. RECOMMENDED THRU HOLE PLATING INCLUDES HASL, OSP, OR IMMERSION Au, Ag OR Sn.
3. HOLE PATTERN REPEATS FOR EACH PORT. SPACING BETWEEN PORTS IS 19.00MM.
4. PCB THICKNESS VARIATION MUST BE CONSIDERED WHEN DETERMINING BEZEL OPENING, SIZE AND LOCATION.

THIS DRAWING CONTAINS INFORMATION THAT IS PROPRIETARY TO MOLEX ELECTRONIC TECHNOLOGIES, LLC AND SHOULD NOT BE USED WITHOUT WRITTEN PERMISSION

FUNCTIONAL SYMBOLS	DIMENSION UNITS: MM	SCALE: 2:1	CURRENT REV DESC: SEE REVISION TABLE
FA = 0	GENERAL TOLERANCES (UNLESS SPECIFIED)		
FC = 0	ANGULAR TOL ± 0.5°		
FF = 0	4 PLACES ±		
DIVISIONAL SYMBOLS	3 PLACES ±		
	2 PLACES ± 0.130		STATUS: Production
	1 PLACE ± 0.25		DRWN: KIRAN N 2026-03-30
	0 PLACES ±		CHK'D: Roy Liu 2026-06-12
	DRAFT WHERE APPLICABLE MUST REMAIN WITHIN DIMENSIONS		APPR: Bill Chen 2026-07-16

THIRD ANGLE PROJECTION | DRAWING: D-SIZE | SERIES: 111131

molex

ENHANCED ZQSFP+ NEARSTACK TO PICO CLASP

PRODUCT CUSTOMER DRAWING

DOCUMENT NUMBER	DOC TYPE	DOC PART	REVISION
1111310799	PSD	000	J2

MATERIAL NUMBER	CUSTOMER	SHEET NUMBER
	GENERAL MARKET	13 OF 17

PCB LAYOUT FOR BELLY TO BELLY MOUNTING

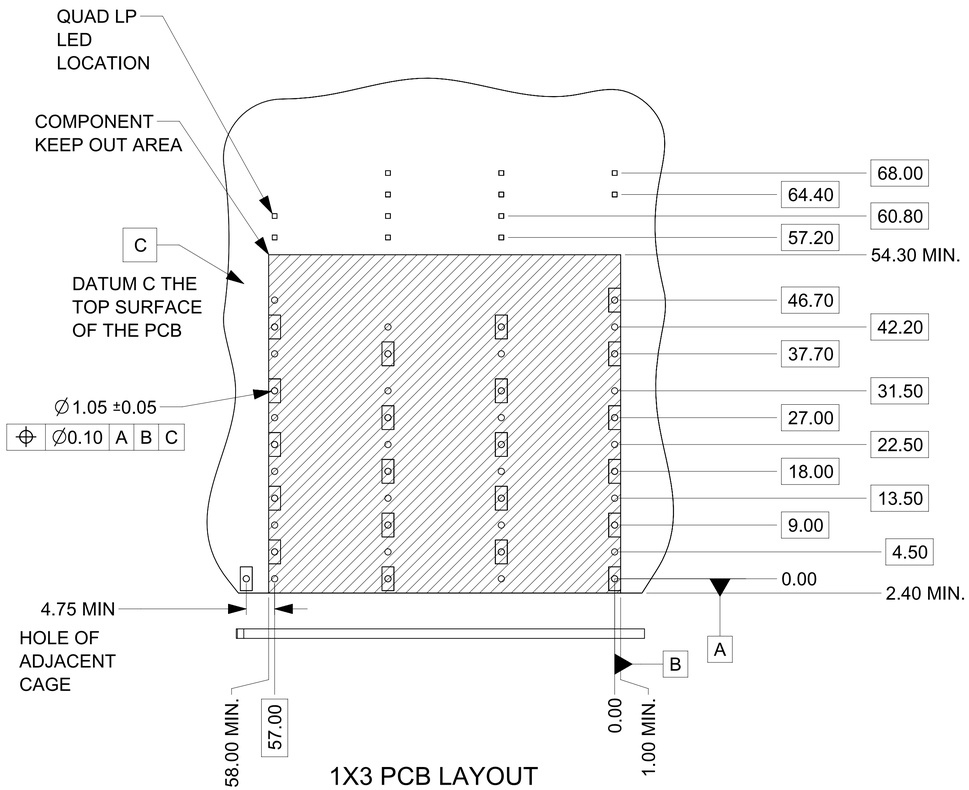

1X3 PCB LAYOUT

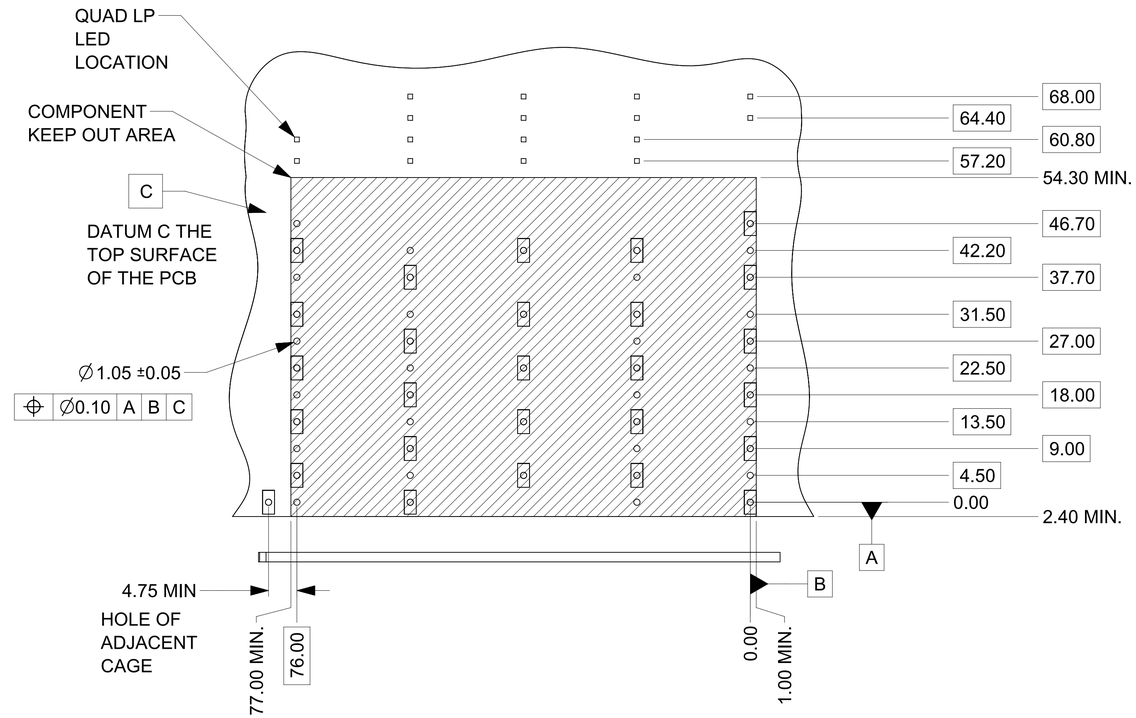

1X4 PCB LAYOUT

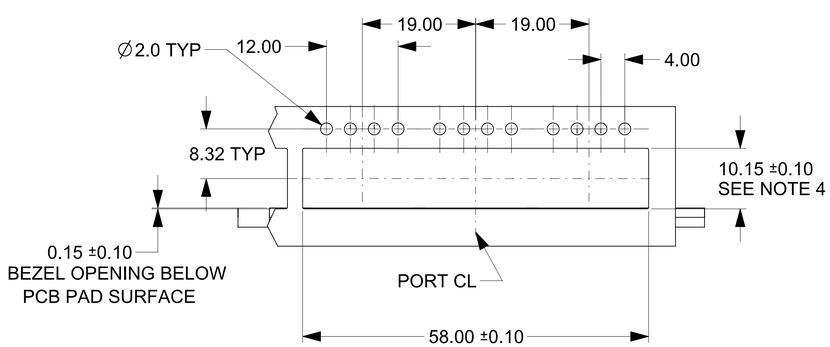

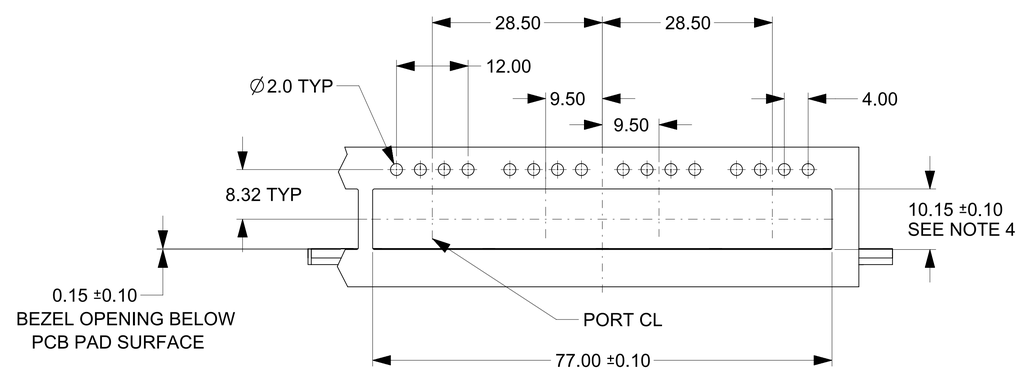

NOTES:
1. PADS AND VIAS GO TO CHASSIS GROUND. (RECOMMENDED PADS TO BE 2.0MM - 4.0MM SQUARE)
2. RECOMMENDED THRU HOLE PLATING INCLUDES HASL, OSP, OR IMMERSION Au, Ag OR Sn.
3. HOLE PATTERN REPEATS FOR EACH PORT. SPACING BETWEEN PORTS IS 19.00MM.
4. PCB THICKNESS VARIATION MUST BE CONSIDERED WHEN DETERMINING BEZEL OPENING, SIZE AND LOCATION.

THIS DRAWING CONTAINS INFORMATION THAT IS PROPRIETARY TO MOLEX ELECTRONIC TECHNOLOGIES, LLC AND SHOULD NOT BE USED WITHOUT WRITTEN PERMISSION

FUNCTIONAL SYMBOLS	DIMENSION UNITS: MM	SCALE: 2:1	CURRENT REV DESC: SEE REVISION TABLE
EA = 0	GENERAL TOLERANCES (UNLESS SPECIFIED)		
EC = 0	ANGULAR TOL	± 0.5°	
EP = 0	4 PLACES	±	
DIVISIONAL SYMBOLS	3 PLACES	±	
	2 PLACES	± 0.130	STATUS: Production
	1 PLACE	± 0.25	DRWN: KIRAN N 2026-03-30
	0 PLACES	±	CHK'D: Roy Liu 2026-06-12
	DRAFT WHERE APPLICABLE MUST REMAIN WITHIN DIMENSIONS		APPR: Bill Chen 2026-07-16

THIRD ANGLE PROJECTION | DRAWING: D-SIZE | SERIES: 111131

molex

ENHANCED ZQSFP+ NEARSTACK TO PICO CLASP

PRODUCT CUSTOMER DRAWING

DOCUMENT NUMBER	DOC TYPE	DOC PART	REVISION
1111310799	PSD	000	J2

MATERIAL NUMBER	CUSTOMER	SHEET NUMBER
	GENERAL MARKET	14 OF 17

PCB LAYOUT FOR BELLY TO BELLY MOUNTING

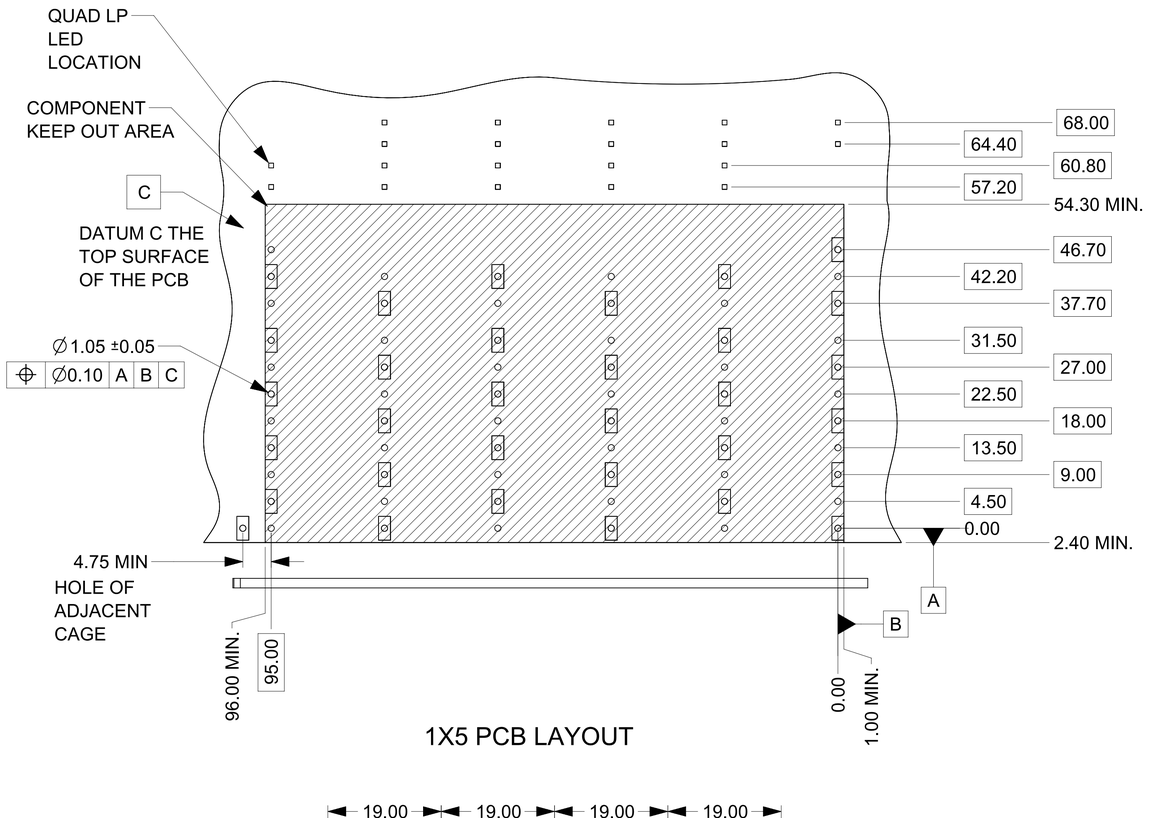

1X5 PCB LAYOUT

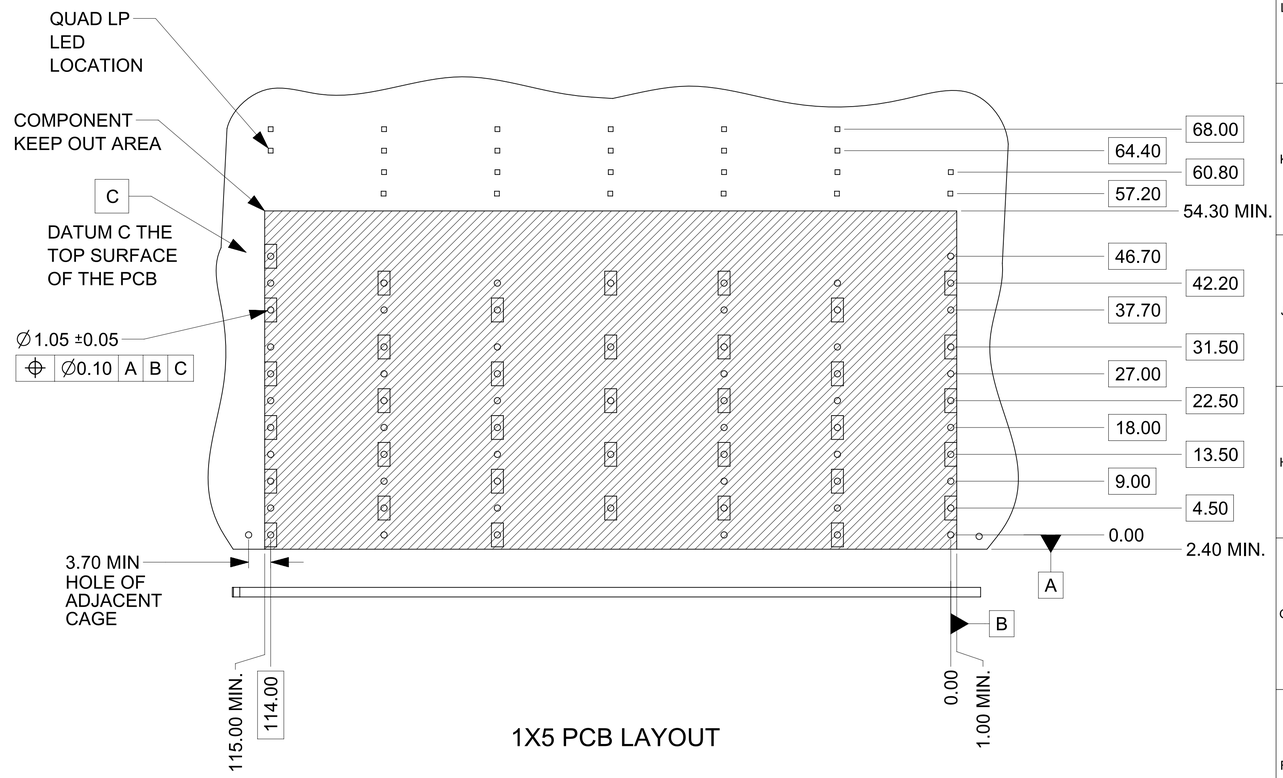

1X5 PCB LAYOUT

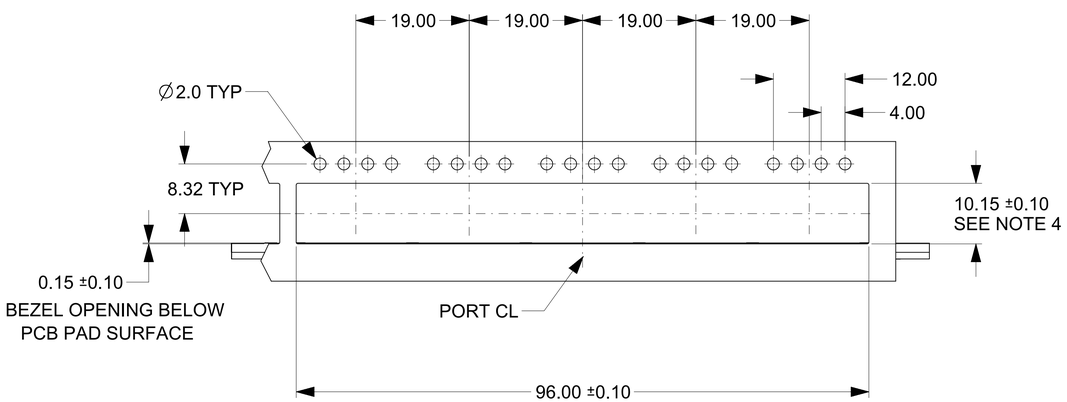

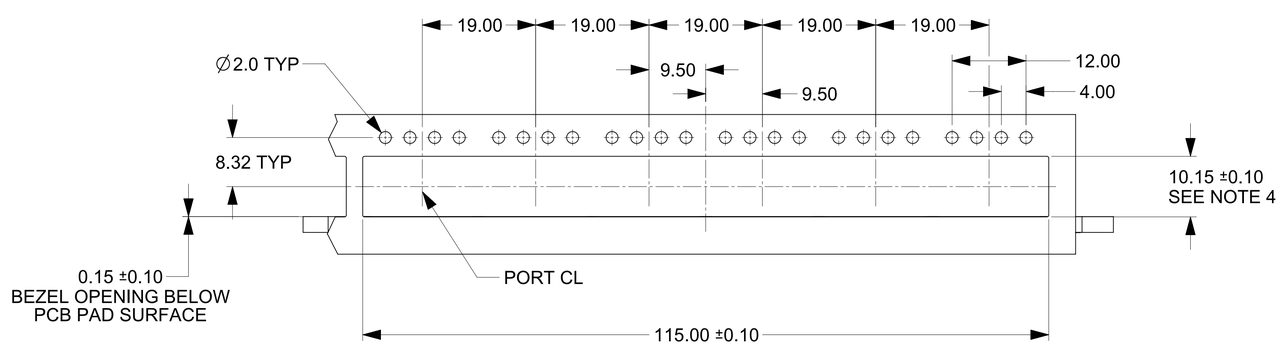

NOTES:
1. PADS AND VIAS GO TO CHASSIS GROUND. (RECOMMENDED PADS TO BE 2.0MM - 4.0mm SQUARE)
2. RECOMMENDED THRU HOLE PLATING INCLUDES HASL, OSP, OR IMMERSION Au, Ag OR Sn.
3. HOLE PATTERN REPEATS FOR EACH PORT. SPACING BETWEEN PORTS IS 19.00MM.
4. PCB THICKNESS VARIATION MUST BE CONSIDERED WHEN DETERMINING BEZEL OPENING, SIZE AND LOCATION.

THIS DRAWING CONTAINS INFORMATION THAT IS PROPRIETARY TO MOLEX ELECTRONIC TECHNOLOGIES, LLC AND SHOULD NOT BE USED WITHOUT WRITTEN PERMISSION

FUNCTIONAL SYMBOLS	DIMENSION UNITS: MM	SCALE: 1:1	CURRENT REV DESC: SEE REVISION TABLE
FA = 0	GENERAL TOLERANCES (UNLESS SPECIFIED)		
FC = 0	ANGULAR TOL ± 0.5°		
FP = 0	4 PLACES ±		
DIVISIONAL SYMBOLS	3 PLACES ±		
	2 PLACES ± 0.130		STATUS: Production
	1 PLACE ± 0.25		DRWN: KIRAN N 2026-03-30
	0 PLACES ±		CHK'D: Roy Liu 2026-06-12
	DRAFT WHERE APPLICABLE MUST REMAIN WITHIN DIMENSIONS		APPR: Bill Chen 2026-07-16

THIRD ANGLE PROJECTION | DRAWING: D-SIZE | SERIES: 111131

molex

ENHANCED ZQSFP+ NEARSTACK TO PICO CLASP

PRODUCT CUSTOMER DRAWING

DOCUMENT NUMBER	DOC TYPE	DOC PART	REVISION
1111310799	PSD	000	J2

MATERIAL NUMBER | CUSTOMER: GENERAL MARKET | SHEET NUMBER: 15 OF 17

FORMAT TC-Rev0-02
REUSE N
DATE 2022/8/01

1 X 1 CAGE ASSEMBLY

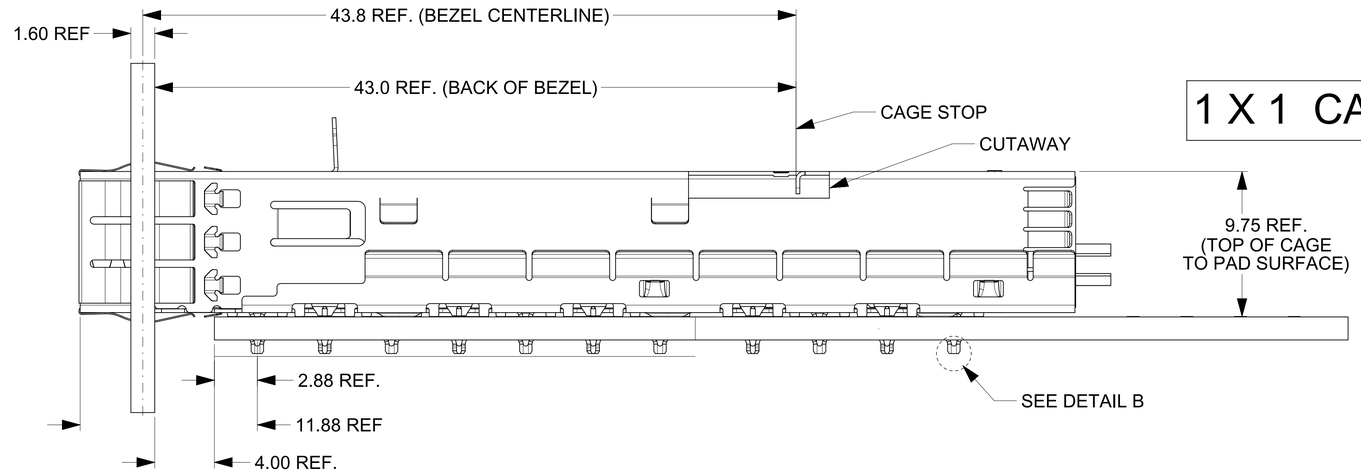

1 X 2 - CAGE ASSEMBLY

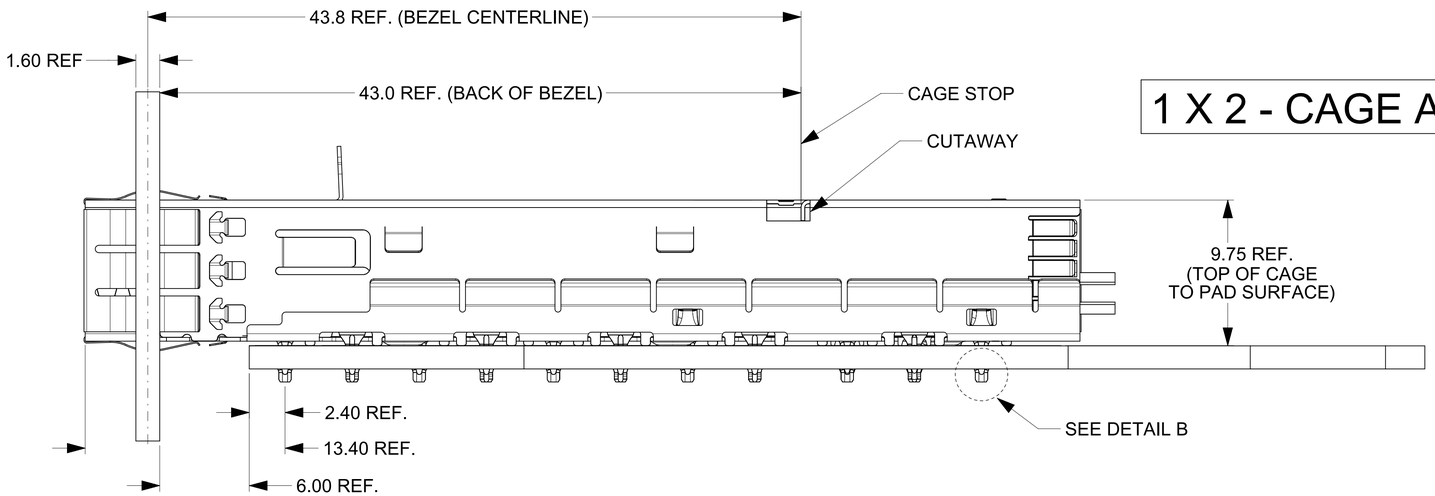

1 X 3 THRU 1 X 6 CAGE ASSEMBLIES

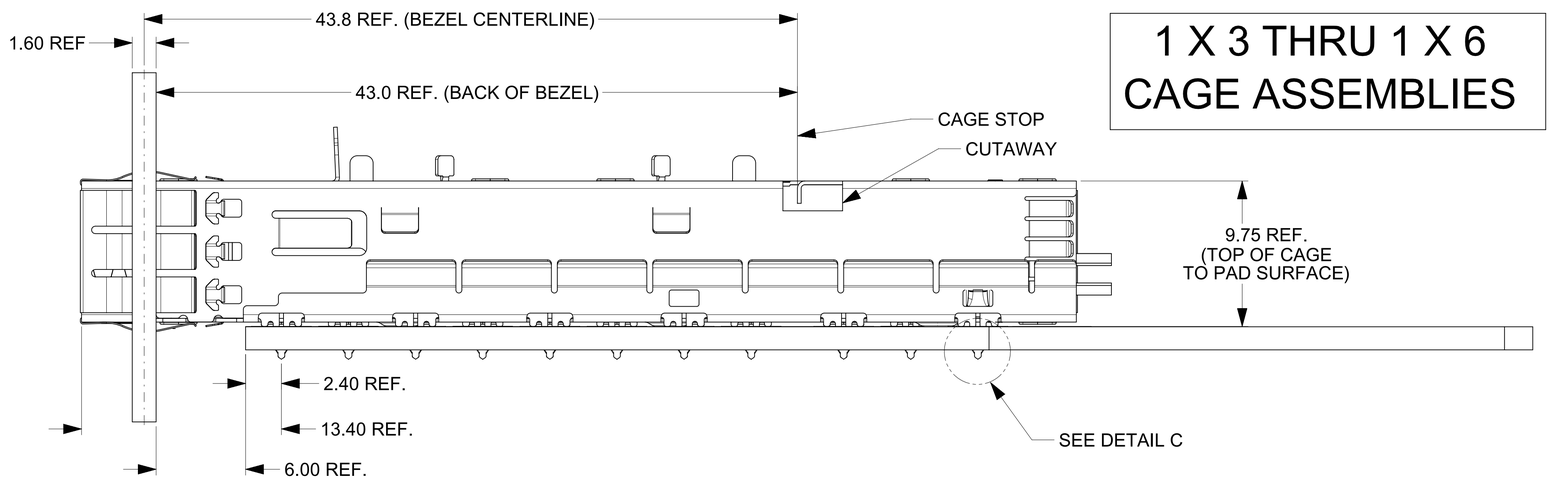

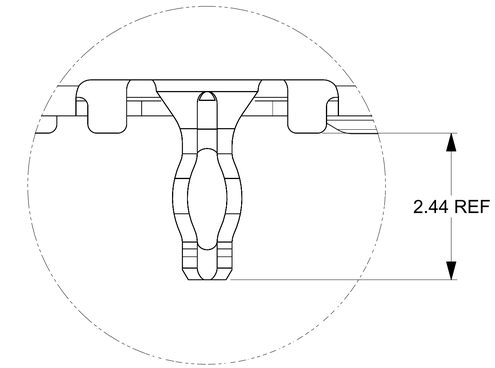

CAGE ASSEMBLIES 1X1 AND 1X2 USE 3D PINS

DETAIL B
SCALE 20:1

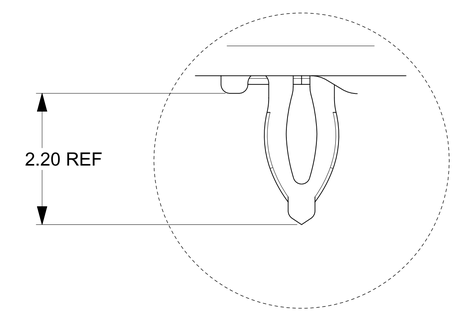

CAGE ASSEMBLIES 1X3 - 1X6 AND 1X2 USE 2D PINS

DETAIL C
SCALE 20:1

FUNCTIONAL SYMBOLS	THIS DRAWING CONTAINS INFORMATION THAT IS PROPRIETARY TO MOLEX ELECTRONIC TECHNOLOGIES, LLC AND SHOULD NOT BE USED WITHOUT WRITTEN PERMISSION		
	DIMENSION UNITS: MM	SCALE: 1:1	CURRENT REV DESC: SEE REVISION TABLE
FA = 0	GENERAL TOLERANCES (UNLESS SPECIFIED)		
FC = 0	ANGULAR TOL	± 0.5°	
FP = 0	4 PLACES	±	
DIVISIONAL SYMBOLS	3 PLACES	±	
	2 PLACES	± 0.130	STATUS: Production
	1 PLACE	± 0.25	DRWN: KIRAN N 2026-03-30
	0 PLACES	±	CHK'D: Roy Liu 2026-06-12
	DRAFT WHERE APPLICABLE MUST REMAIN WITHIN DIMENSIONS		APPR: Bill Chen 2026-07-16

THIRD ANGLE PROJECTION | DRAWING: D-SIZE | SERIES: 111131

molex

ENHANCED ZQSFP+ NEARSTACK TO PICO CLASP

PRODUCT CUSTOMER DRAWING

DOCUMENT NUMBER	DOC TYPE	DOC PART	REVISION
1111310799	PSD	000	J2

MATERIAL NUMBER | CUSTOMER: GENERAL MARKET | SHEET NUMBER: 16 OF 17

FORMAT: TC-Grained-C
TEMPLATE: 000000
DATE: 2022/06/01

REVISION HISTORY		
DATE	REV	DESCRIPTION
10/04/2017	A	INITIAL RELEASE
10/06/2017	B	CORRECTION BASIC DIMENSIONS ON 1X1 PCB LAYOUT VIEW, SHEET 4
12/12/2017	C	1. CLARIFIED WIRING DIAGRAM
		2. MODIFIED VIEWS FOR CLARITY
		3. ADDED HEAT SINK INFOMATION
02/08/2018	C1	1. SHEET 13, UPDATED VIEWS FOR CLARITY
07/18/2018	D	1. ADDED PART NUMBER 1111311945. SHEET 2, PART NUMBER TABLE.
		2. ADDED REF DIMENSIONS ON LIGHT PIPES, SHEET 1.
		3. ADDED PICO CLASP OVERMOLD NEAR CONNECTOR FOR REPRESENTATION OF FINAL ASSEMBLY.
08/07/2018	E	1. UPDATED VIEW ON 1X2 CAGE ASSEMBLY. SHEET 16.
		2. UPDATED CAGE HEIGHT ON 1X3-1X6 CAGE ASSEMBLIES. SHEET 16, ZONE C10.
		3. UPDATED PIN REF HEIGHTS. SHEET 16, ZONES E16 AND J2.
		4. UPDATED DATUM A REFERENCE ON 1X1 PCB LAYOUT. SHEET 10, ZONE F15.
		5. ADDED NEARSTACK CONNECTOR VIEW. SHEET 1.
		6. ADDED LIGHT PIPE OPTIONS. SHEET 8.
		7. ADDED COMPONENT KEEPOUT AREA MIN. DIMENSIONS. PCP LAYOUT SHEETS.
06/19/2019	F	1. UPDATED SHEETS TO REMOVE PRE-RELEASE SIGN
		2. ADDED NOTE 8 AND LASER ETCHING TO SHEET 1
01/09/2020	G	1. ADDED NEARSTACK PULLBALE ON SHEET 1
2021/12/31	H	1. ADDED F/G PN FOR NEARSTACK GEN 2.0
		2.UPADTE NOTES 6
2022/03/14	J	TEAMCENTER MIGRATION
2024/01/30	J1	1. OBSOLETED PARTS WITH GEN 1.0 NEARSTACK
		2. NOTE 6: DELETE DESCRIPTION RELATED TO GEN1.0 NEARSTACK [SHEET 1]
2026/03/30	J2	SHEET 1: UPDATED SN RULE FROM YYDDDLSSSS TO YYDDDLSSSSS IN NOTE #8 AND ON CAGE ENGRAVING [J15] SHEET 2: ADDED VIEW AT [D13] TO SHOW NEARSTACK SIDE LASER ENGRAVING DETAILS AND NOTE

THIS DRAWING CONTAINS INFORMATION THAT IS PROPRIETARY TO MOLEX ELECTRONIC TECHNOLOGIES, LLC AND SHOULD NOT BE USED WITHOUT WRITTEN PERMISSION

FUNCTIONAL SYMBOLS
FA = 0
FC = 0
FP = 0
DIVISIONAL SYMBOLS

DIMENSION UNITS	SCALE
MM	1:1

GENERAL TOLERANCES (UNLESS SPECIFIED)

ANGULAR TOL	± 0.5°
4 PLACES	±
3 PLACES	±
2 PLACES	± 0.130
1 PLACE	± 0.25
0 PLACES	±

DRAFT WHERE APPLICABLE MUST REMAIN WITHIN DIMENSIONS

CURRENT REV DESC: SEE REVISION TABLE

STATUS: Production
DRWN: KIRAN N 2026-03-30
CHK'D: Roy Liu 2026-06-12
APPR: Bill Chen 2026-07-16

THIRD ANGLE PROJECTION | DRAWING: D-SIZE | SERIES: 111131

molex

ENHANCED ZQSFP+ NEARSTACK TO PICO CLASP

PRODUCT CUSTOMER DRAWING

DOCUMENT NUMBER	DOC TYPE	DOC PART	REVISION
1111310799	PSD	000	J2

MATERIAL NUMBER	CUSTOMER	SHEET NUMBER
	GENERAL MARKET	17 OF 17