SAP P/N #	ENGINEERING P/N	FINISHED LENGTH
1300390208	DND92A-M005	0.5M [1FT 8 IN]
1300390211	DND92A-M020	2M [6FT 7 IN]
1300390213	DND92A-M050	5M [16FT 5 IN]

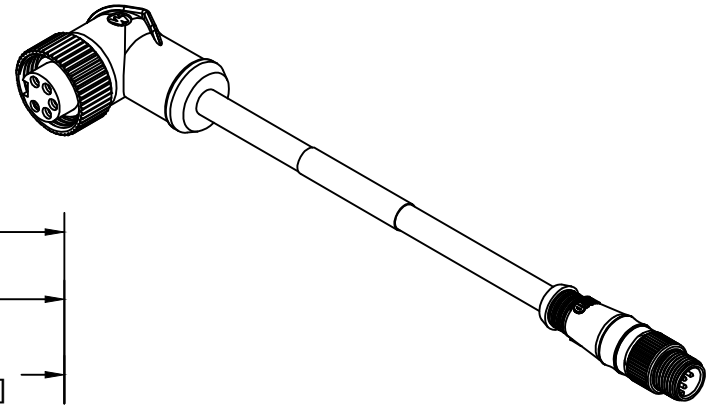

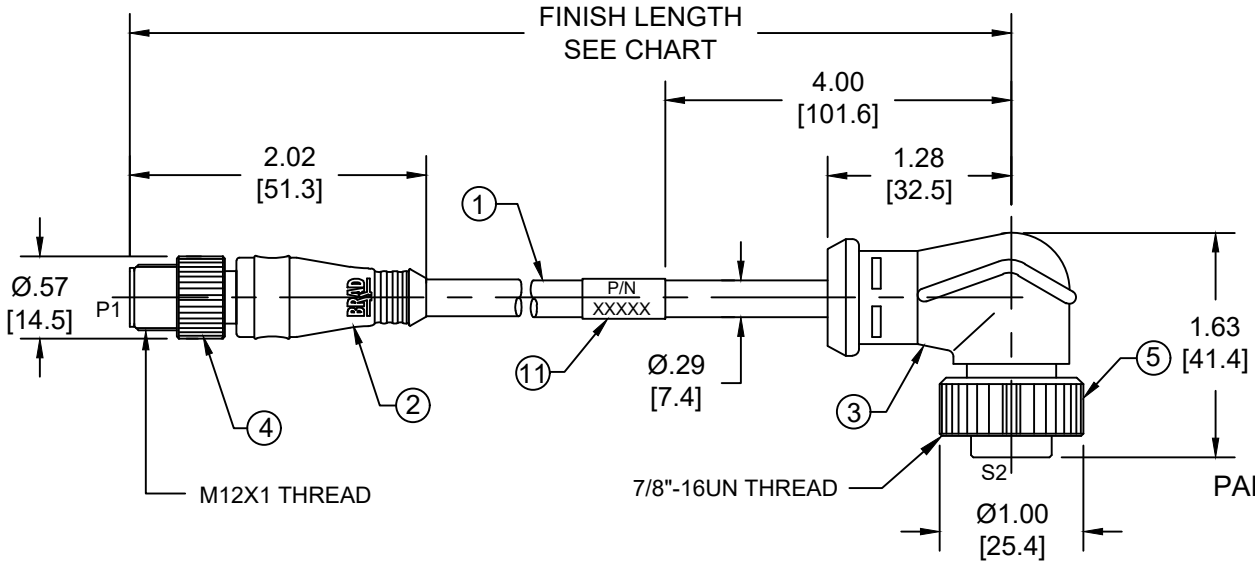

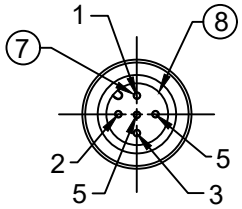

MALE FACE VIEW

NOTES:

1. MATERIAL: SEE TABLE
2. FINISH: SEE TABLE
3. ELECTRICAL: (C)
   VOLTAGE: 60V
   CURRENT: 4A
4. TEMP RATING: -20°C TO +80°C
5. PROTECTION: IP67 (WHEN MATED)
6. UL LISTED FILE: E152210
   CSA CERTIFIED FILE: LR6837
7. ALL DIMENSIONS ARE FOR REFERENCE UNLESS TOLERANCED OR NOTED OTHERWISE

P1		S2
1	DRAIN	1
2	RED	2
3	BLACK	3
4	WHITE	4
5	BLUE	5

WIRING DIAGRAM

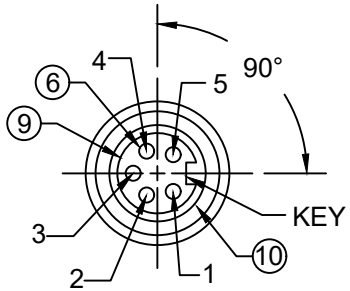

FEMALE FACE VIEW

PART NUMBER LEGEND

DND92A-M005

LENGTH:
M005= 0.5 METER
M010= 1 METER
M100= 10 METER

CABLE LENGTH TOLERANCES
<.3M [1FT]: +19mm-0 [+.75in-0]
.3 - .9M [1 - 3FT]: +44.5mm-0 [+1.75in-0]
.9 - 1.8M [3 - 6FT]: +55.6mm-0 [+2.19in-0]
1.8 - 3.7M [6 - 12FT: +88.9mm-0 [+3.50in-0]
3.7 - 7.3M [12 - 24FT]: +165.1mm-0 [+6.50in-0]
7.3-14.6M [24 - 48FT]: +317.5mm-0 [+12.50in-0]
14.6 - 30.5M [48-100FT]: +622.3mm-0 [+24.50in-0]
OVER 30M [100FT] +2% OF FINISHED LENGTH

ITEM	COMPONENT	MATERIAL	FINISH	
11	WRAP LABEL	VINYL	YELLOW	(C)
10	FRICTION RING	NYLON	WHITE	
9	FEMALE INSERT(MINI)	TPE	BLACK	
8	MALE INSERT(MICRO)	NYLON	BLACK	
7	PIN CONTACT	COPPER ALLOY	GOLD PLATED	(C)
6	SOCKET CONTACT	COPPER ALLOY	GOLD PLATED	(C)
5	COUPLING NUT(MINI)	ZINC DIE-CAST	BLACK E-COAT	
4	COUPLING NUT(MICRO)	ZINC DIE-CAST	BLACK E-COAT	
3	OVERMOLD(MINI)	TPC	GRAY	
2	OVERMOLD(MICRO)	TPC	GRAY	
1	DEVICENET DROP CABLE	PVC JACKET	GRAY	

DOCUMENT STATUS	P1	RELEASE DATE	2024/09/19 14:14:36

THIS DRAWING CONTAINS INFORMATION THAT IS PROPRIETARY TO MOLEX ELECTRONIC TECHNOLOGIES, LLC AND SHOULD NOT BE USED WITHOUT WRITTEN PERMISSION

FUNCTIONAL SYMBOLS: FA=0, FC=0, FP=0
DIVISIONAL SYMBOLS

DIMENSION UNITS: INCH/MM
SCALE: NTS

GENERAL TOLERANCES (UNLESS SPECIFIED)

	mm	INCH
4 PLACES	±----	±----
3 PLACES	±----	±----
2 PLACES	±----	±----
1 PLACE	±----	±----
0 PLACES	±----	±----
ANGULAR TOL ±	---- °	

DRAFT WHERE APPLICABLE MUST REMAIN WITHIN DIMENSIONS

CURRENT REV DESC: VOLTAGE CHANGED FROM 250V TO 60V.LABEL FINISH CHANGED FROM BLACK/YELLOW TO YELLOW. ITEM 6, 7 FINISH CHANGED TO GOLD PLATED

EC NO: 796537
DRWN: ABENJAMINLW 2024/08/05
CHK'D: LESPINOZA 2024/08/27
APPR: BWOODMAN 2024/09/19

INITIAL REVISION:
DRWN: TWOLDEGE 2010/01/11
APPR: JFMURPHY 2010/01/20

THIRD ANGLE PROJECTION | DRAWING: A-SIZE | SERIES: 130039

molex

MICRO-MINI CHANGE DEVICENET, M12-A-SIZE, 5 POLE, MALE STRAIGHT-FEMALE 90DEG, SINGLE KEY, #22/4 AWG

PRODUCT CUSTOMER DRAWING

DOCUMENT NUMBER	DOC TYPE	DOC PART	REVISION
SD-130039-024	PSD	001	C

MATERIAL NUMBER	CUSTOMER	SHEET NUMBER
SEE CHART	GENERAL MARKET	1 OF 1

FORMAT: IN-ACAD-tb-prod-A
REVISION: B
DATE: 2020/01/14