MATERIAL NO.	ENGINEERING NO.	FINISHED LENGTH
1300390317	DNB5100-M005	0.5 M (1 FT 7.69 IN)
1300390318	DNB5100-M010	1 M (3 FT 3.37 IN)

B

CABLE LENGTH TOLERANCES
<.3M [1FT]: +19mm-0 [+.75in-0]
.3 - .9M [1 - 3FT]: +44.5mm-0 [+1.75in-0]
.9 - 1.8M [3 - 6FT]: +55.6mm-0 [+2.19in-0]
1.8 - 3.7M [6 - 12FT: +88.9mm-0 [+3.50in-0]
3.7 - 7.3M [12 - 24FT]: +165.1mm-0 [+6.50in-0]
7.3-14.6M [24 - 48FT]: +317.5mm-0 [+12.50in-0]
14.6 - 30.5M [48-100FT]: +622.3mm-0 [+24.50in-0]
OVER 30M [100FT] +2% OF FINISHED LENGTH

B

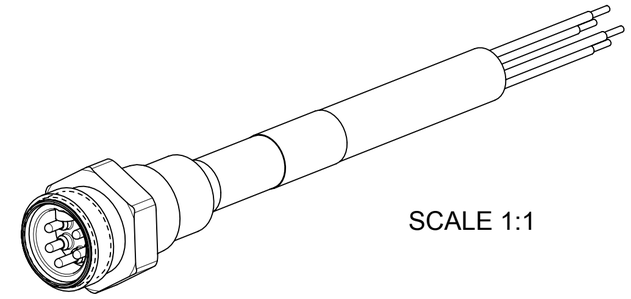

SCALE 1:1

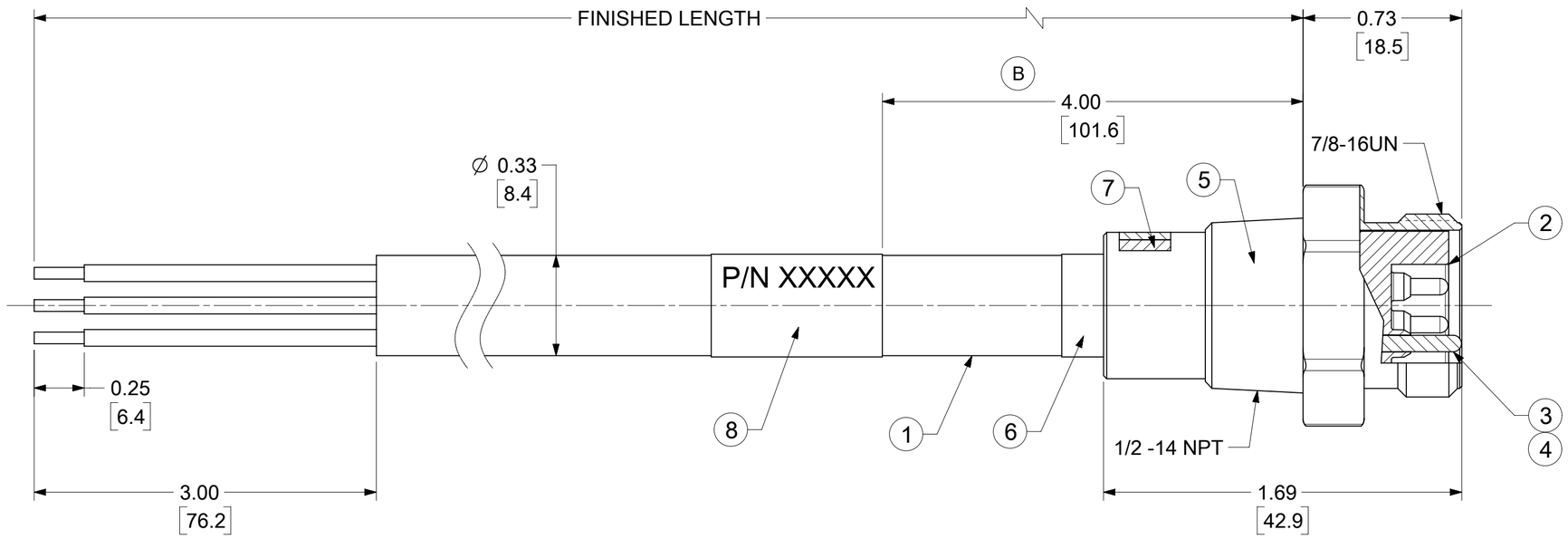

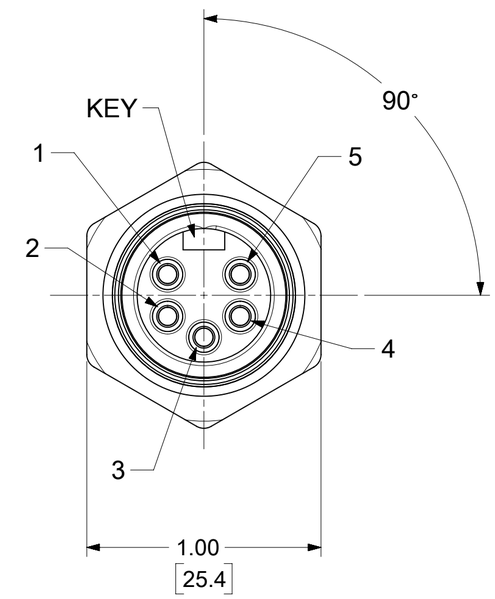

NOTES:
1. MATERIAL: AS NOTED
2. FINISH: AS NOTED
3. ELECTRICAL:
   VOLTAGE: 300V PER IEC60664 (B)
   300V PER UL2238
   CURRENT: 4A
4. TEMP RATING: -20°C TO +80°C (B)
5. PROTECTION: IP67 (WHEN MATED)
6. UL LISTED FILE: E152210 (B)
   CSA CERTIFIED FILE: LR6837
7. ALL DIMS ARE FOR REFERENCE UNLESS TOLERANCED OR NOTED OTHERWISE

WIRING DIAGRAM

P1

1	DRAIN
2	RED +V
3	BLACK -V
4	WHITE CAN H
5	BLUE CAN L

PART NUMBER LEGEND (B)

DNB5100-M010

FINISHED LENGTH
M005= 0.5 M
M010= 1 M
M100= 10M

ITEM	DESCRIPTION	MATERIAL	FINISH	
8	WRAP LABEL	VINYL	BLACK/YELLOW	
7	POTTING MATERIAL	EPOXY	BLACK	
6	HEAT SHRINK TUBING	POLYOLEFIN	BLACK	
5	RECEPTACLE SHELL	ZINC DIE-CAST	NICKEL PLATE	B
4	PIN CONTACT 18AWG	Cu ALLOY	GOLD OVER NICKEL	
3	PIN CONTACT 16AWG	Cu ALLOY	GOLD OVER NICKEL	
2	MALE INSERT	TPE	BLACK	B
1	CABLE, DEV-NET, 16/20 AWG	PVC JACKET	GRAY	

DOCUMENT STATUS	P1	RELEASE DATE	2022/06/24 12:55:24

THIS DRAWING CONTAINS INFORMATION THAT IS PROPRIETARY TO MOLEX ELECTRONIC TECHNOLOGIES, LLC AND SHOULD NOT BE USED WITHOUT WRITTEN PERMISSION

FUNCTIONAL SYMBOLS: FA = 0, FC = 0, FP = 0
DIVISIONAL SYMBOLS

DIMENSION UNITS: INCH/MM
SCALE: 2:1

GENERAL TOLERANCES (UNLESS SPECIFIED)

	MM	INCH
4 PLACES	±	±
3 PLACES	±	±
2 PLACES	±	±
1 PLACE	±	±
0 PLACES	±	±
ANGULAR TOL	± °	

DRAFT WHERE APPLICABLE MUST REMAIN WITHIN DIMENSIONS

CURRENT REV DESC: UPDATED ITEM #2,5, LABEL DIM. AND MATERIAL P/N TABLE . ADDED CSA,IEC/UL VOLT, TEMP RATING, IP RATING, TOL. CHART AND PART NUMBER LEGEND

EC NO: 711366
DRWN: AKABADI 2021/10/19
CHK'D: RSTONE 2022/06/21
APPR: BWOODMAN 2022/06/24

INITIAL REVISION:
DRWN: RSTONE 2009/05/26
APPR: JFMURPHY 2009/06/10

THIRD ANGLE PROJECTION | DRAWING: C-SIZE | SERIES: 130039

molex

MINI-CHANGE DEVICENET RECEPTACLE, A-SIZE
5 POLE, MALE, STRAIGHT, SINGLE KEY,16/20 AWG

PRODUCT CUSTOMER DRAWING

DOCUMENT NUMBER	DOC TYPE	DOC PART	REVISION
SD-130039-004	PSD	001	B

MATERIAL NUMBER	CUSTOMER	SHEET NUMBER
SEE TABLE	GENERAL MARKET	1 OF 1

FORMAT: Eng-legal-master-tb-prod-C
REVISION: E
DATE: 2020/01/14