MATERIAL NUMBER	ENGINEERING NUMBER	FINISHED LENGTH
1300390283	DN5000-M005	0.5M [1 FT 7 IN]
1300390290	DN5000-M050	5M [16 FT 5 IN]

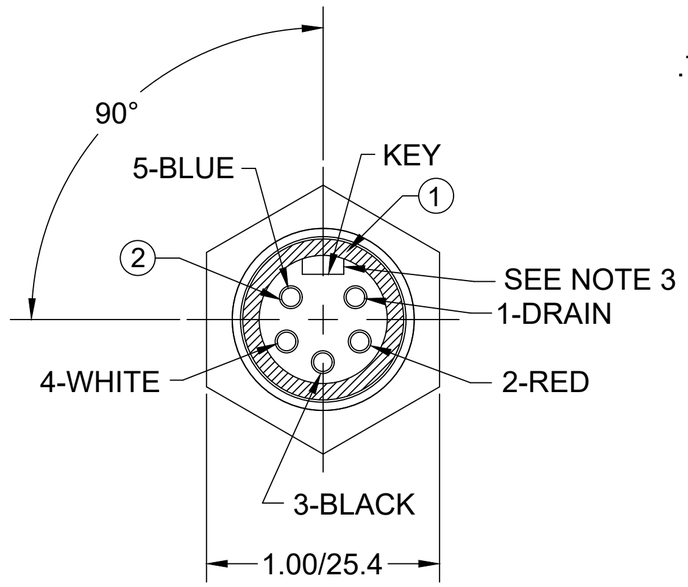

FEMALE INSERT - FRONT VIEW

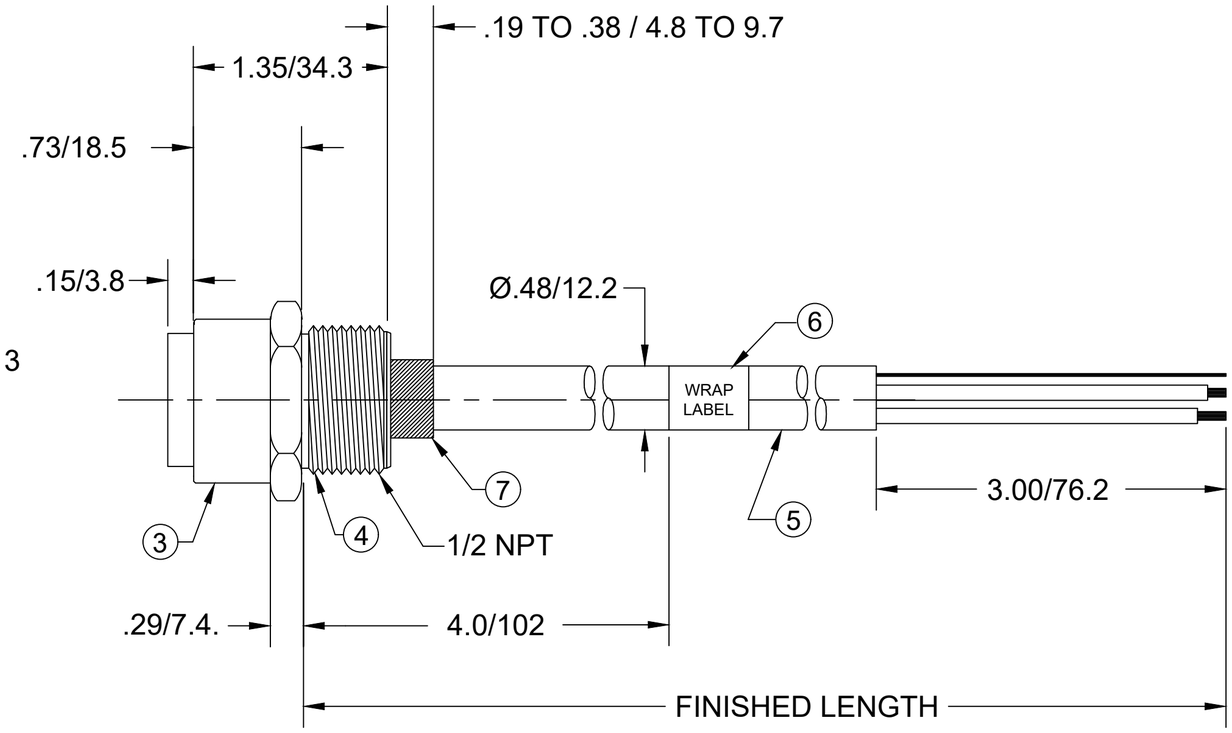

NOTES:

1. MATERIAL: AS NOTED
2. FINISH: AS NOTED
3. ELECTRICAL:
   VOLTAGE RATING PER IEC 60664: 300V
   VOLTAGE RATING PER UL: 300V
   CURRENT: 4A
4. TEMP RATING: -20° TO +60°C
5. PROTECTION: IP67 (WHEN MATED)
6. COUPLING THREAD- 7/8-16 UN
7. UL LISTED FILE: E152210
   CSA CERTIFIED FILE: LR6837
8. ALL DIMENSIONS ARE FOR REFERENCE UNLESS TOLERANCED OR NOTED OTHERWISE

PART NO. MATRIX
DN5000M003

LENGTH
M005 = 0.5 METER
M010 = 1 METER
M100 = 10 METER

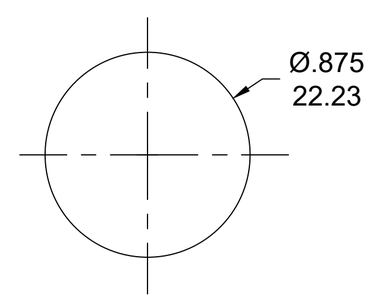

RECOMMENDED PANEL CUTOUT

CABLE LENGTH TOLERANCES
>.3M [1FT]: +19mm-0 [+.75in-0]
.3 - .9M [1 - 3FT]: +44.5mm-0 [+1.75in-0]
.9 - 1.8M [3 - 6FT]: +55.6mm-0 [+2.19in-0]
1.8 - 3.7M [6 - 12FT: +88.9mm-0 [+3.50in-0]
3.7 - 7.3M [12 - 24FT]: +165.1mm-0 [+6.50in-0]
7.3-14.6M [24 - 48FT]: +317.5mm-0 [+12.50in-0]
14.6 - 30.5M [48-100FT]: +622.3mm-0 [+24.50in-0]
OVER 30M [100FT] +2% OF FINISHED LENGTH

ITEM	COMPONENT	MATERIAL	FINISH
1	INSERT	TPE	GRAY
2	CONTACT SOCKET	COPPER ALLOY	GOLD OVER NICKEL
3	RECEPTACLE SHELL	ZINC	NICKEL
4	POTTING MATERIAL	EPOXY	BLACK
5	TRUNK CABLE 2/15 &2/18 SHIELD PAIR	PVC	GRAY
6	LABEL	VINYL	BLACK/YELLOW
7	HEAT SHRINK TUBING	POLYOLEFIN	BLACK

THIS DRAWING CONTAINS INFORMATION THAT IS PROPRIETARY TO MOLEX ELECTRONIC TECHNOLOGIES, LLC AND SHOULD NOT BE USED WITHOUT WRITTEN PERMISSION

DIMENSION UNITS	SCALE
INCH/MM	NTS

GENERAL TOLERANCES (UNLESS SPECIFIED)

	mm	INCH
4 PLACES	±----	±----
3 PLACES	±----	±----
2 PLACES	±----	±----
1 PLACE	±----	±----
0 PLACES	±----	±----
ANGULAR TOL ±	---- °	

DRAFT WHERE APPLICABLE MUST REMAIN WITHIN DIMENSIONS

CURRENT REV DESC: REMOVED OBSOLETED PART NUMBERS AS PER PCN#516986

EC NO: 831193
DRWN: SANATK1 2025/08/11
CHK'D: GGA 2025/08/19
APPR: GGA 2025/08/19

INITIAL REVISION:
DRWN: AAKHTAR 2017/09/15
APPR: BWOODMAN 2017/10/15

THIRD ANGLE PROJECTION

molex

MINI-CHANGE RECEPTACLE, A-SIZE
5 POLE, FEMALE, STRAIGHT, SINGLE KEY,
15/18 AWG

PRODUCT CUSTOMER DRAWING

DOCUMENT NUMBER	DOC TYPE	DOC PART	REVISION
SD-130039-062	PSD	001	B1

DRAWING	SERIES	MATERIAL NUMBER	CUSTOMER	SHEET NUMBER
C-SIZE	130039	SEE CHART	GENERAL MARKET	1 OF 1

DOCUMENT STATUS	P1	RELEASE DATE	2025/08/19 10:06:49

FORMAT: IN-ACAD-tb-prod-C
REVISION: B
DATE: 2020/01/14