SAP P/N #	ENGINEERING P/N	FINISHED LENGTH
1300390112	DND29A-M002	0.2M [8 IN]
1300390176	DND29A-M030	3M [9FT 10 IN]
1300390177	DND29A-M050	5M [16FT 5 IN]

PART NUMBER LEGEND

DND29A-M002

LENGTH:
M005= 0.5 METER
M010= 1 METER
M100= 10 METER

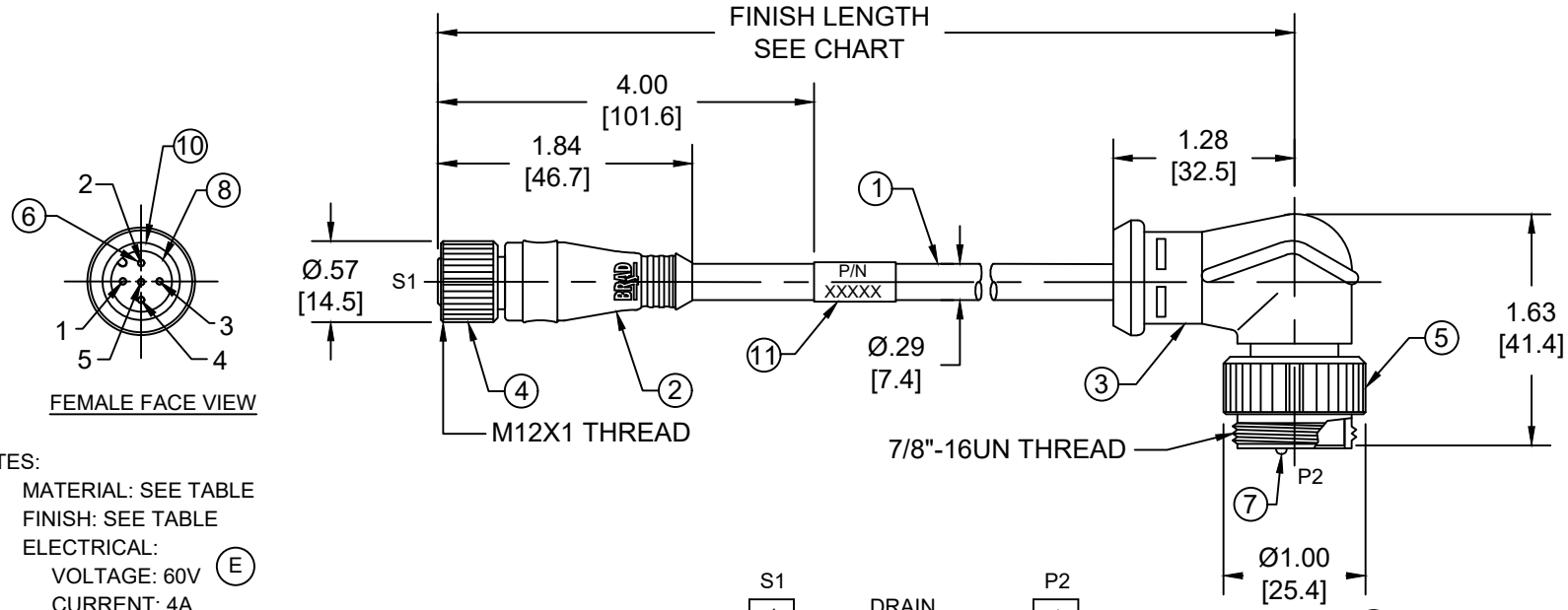

NOTES:
1. MATERIAL: SEE TABLE
2. FINISH: SEE TABLE
3. ELECTRICAL: (E)
   VOLTAGE: 60V
   CURRENT: 4A
4. TEMP RATING: -20°C TO +80°C
5. PROTECTION: IP67 (WHEN MATED)
6. UL LISTED FILE: E152210
   CSA CERTIFIED FILE: LR6837
7. ALL DIMENSIONS ARE FOR REFERENCE UNLESS TOLERANCED OR NOTED OTHERWISE

S1		P2
1	DRAIN	1
2	RED	2
3	BLACK	3
4	WHITE	4
5	BLUE	5

WIRING DIAGRAM

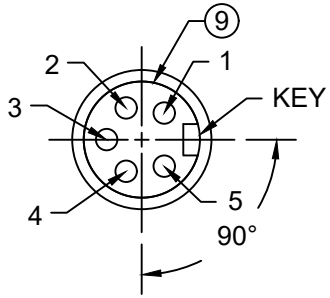

MALE FACE VIEW

CABLE LENGTH TOLERANCES
<.3M [1FT]: +19mm-0 [+.75in-0]
.3 - .9M [1 - 3FT]: +44.5mm-0 [+1.75in-0]
.9 - 1.8M [3 - 6FT]: +55.6mm-0 [+2.19in-0]
1.8 - 3.7M [6 - 12FT: +88.9mm-0 [+3.50in-0]
3.7 - 7.3M [12 - 24FT]: +165.1mm-0 [+6.50in-0]
7.3-14.6M [24 - 48FT]: +317.5mm-0 [+12.50in-0]
14.6 - 30.5M [48-100FT]: +622.3mm-0 [+24.50in-0]
OVER 30M [100FT] +2% OF FINISHED LENGTH

ITEM	COMPONENT	MATERIAL	FINISH	
11	WRAP LABEL	VINYL	YELLOW	(E)
10	O-RING	NITRILE	RED	
9	INSERT(MINI)	TPE	BLACK	
8	INSERT(MICRO)	NYLON	BLACK	
7	PIN CONTACT	COPPER ALLOY	GOLD PLATED	(E)
6	SOCKET CONTACT	COPPER ALLOY	GOLD PLATED	(E)
5	COUPLING NUT(MINI)	ZINC DIE-CAST	BLACK E-COAT	
4	COUPLING NUT(MICRO)	ZINC DIE-CAST	BLACK E-COAT	
3	OVERMOLD(MINI)	TPC	GRAY	
2	OVERMOLD(MICRO)	TPC	GRAY	
1	DEVICENET DROP CABLE	PVC JACKET	GRAY	

DOCUMENT STATUS	P1	RELEASE DATE	2024/09/19 14:14:34

THIS DRAWING CONTAINS INFORMATION THAT IS PROPRIETARY TO MOLEX ELECTRONIC TECHNOLOGIES, LLC AND SHOULD NOT BE USED WITHOUT WRITTEN PERMISSION

FUNCTIONAL SYMBOLS: FA=0, FC=0, FP=0
DIVISIONAL SYMBOLS

DIMENSION UNITS: INCH/MM
SCALE: NTS

GENERAL TOLERANCES (UNLESS SPECIFIED)

	mm	INCH
4 PLACES	±----	±----
3 PLACES	±----	±----
2 PLACES	±----	±----
1 PLACE	±----	±----
0 PLACES	±----	±----
ANGULAR TOL ±	---- °	

DRAFT WHERE APPLICABLE MUST REMAIN WITHIN DIMENSIONS

CURRENT REV DESC: VOLTAGE CHANGED FROM 250V TO 60V.LABEL FINISH CHANGED FROM BLACK/YELLOW TO YELLOW. ITEM 6, 7 FINISH CHANGED TO GOLD PLATED

EC NO:	796537	
DRWN:	ABENJAMINLW	2024/08/05
CHK'D:	LESPINOZA	2024/08/27
APPR:	BWOODMAN	2024/09/19
INITIAL REVISION:		
DRWN:	TWOLDEGE	2010/01/11
APPR:	JFMURPHY	2010/01/20

THIRD ANGLE PROJECTION | DRAWING: A-SIZE | SERIES: 130039

molex

MINI-MICRO CHANGE DEVICENET, A-SIZE-M12, 5 POLE, MALE 90DEG-FEMALE STRAIGHT, SINGLE KEY, #22/4 AWG

PRODUCT CUSTOMER DRAWING

DOCUMENT NUMBER	DOC TYPE	DOC PART	REVISION
SD-130039-021	PSD	001	E

MATERIAL NUMBER	CUSTOMER	SHEET NUMBER
SEE CHART	GENERAL MARKET	1 OF 1

FORMAT: IN-ACAD-tb-prod-A
REVISION: B
DATE: 2020/01/14