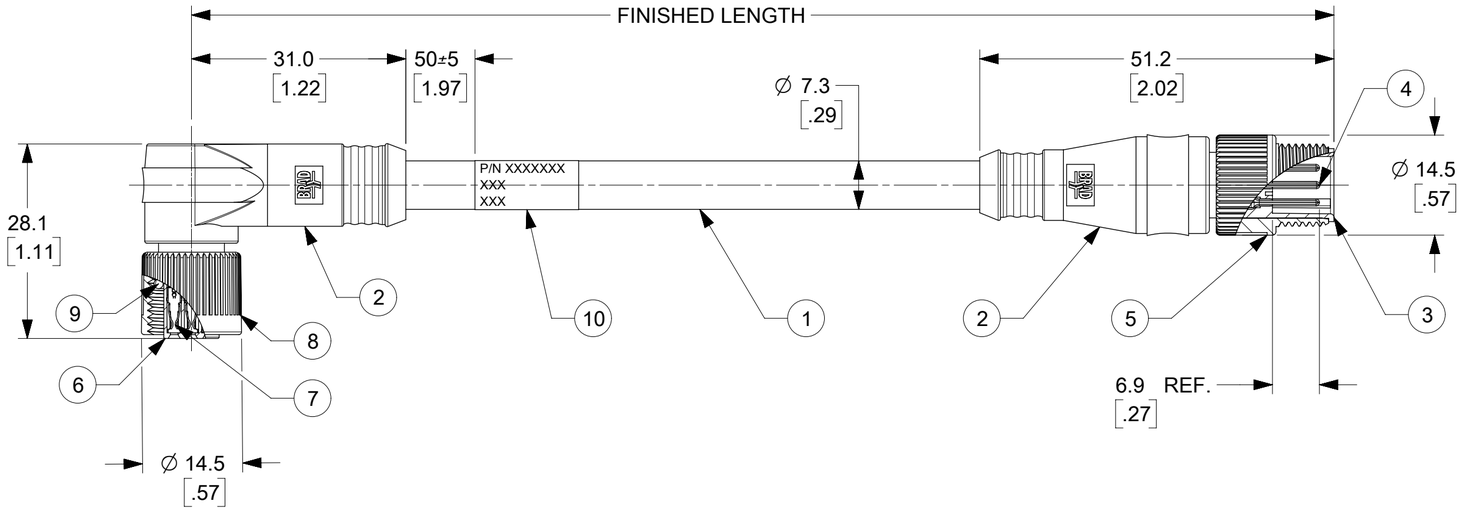

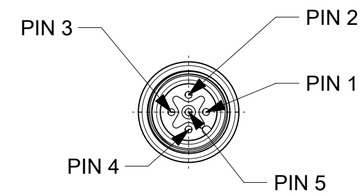

MALE FACE VIEW

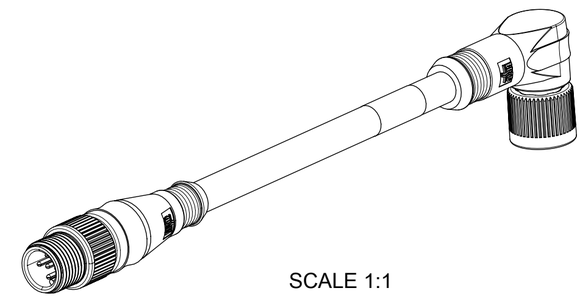

SCALE 1:1

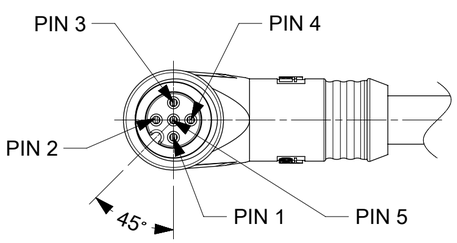

FEMALE FACE VIEW

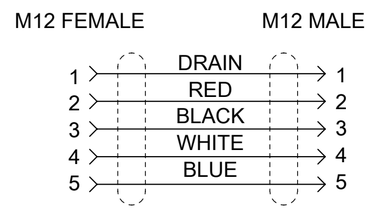

WIRE DIAGRAM

DND32A-M006

LENGTH
M001 = .1 METERS
M010 = 1.0 METERS
M100 = 10 METERS

PART NUMBER LEGEND

CABLE LENGTH TOLERANCES
<.3M [1FT]: +19mm-0 [+.75in-0]
.3 - .9M [1 - 3FT]: +44.5mm-0 [+1.75in-0]
.9 - 1.8M [3 - 6FT]: +55.6mm-0 [+2.19in-0]
1.8 - 3.7M [6 - 12FT: +88.9mm-0 [+3.50in-0]
3.7 - 7.3M [12 - 24FT]: +165.1mm-0 [+6.50in-0]
7.3-14.6M [24 - 48FT]: +317.5mm-0 [+12.50in-0]
14.6 - 30.5M [48-100FT]: +622.3mm-0 [+24.50in-0]
OVER 30M [100FT] +2% OF FINISHED LENGTH

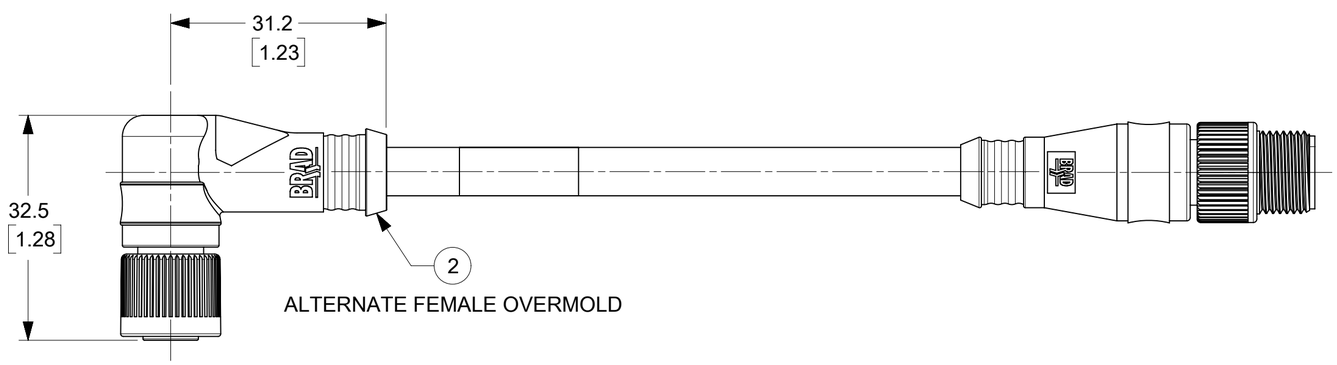

ALTERNATE FEMALE OVERMOLD

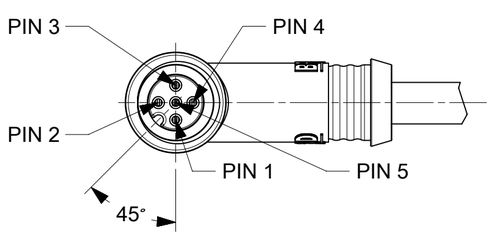

FINISHED LENGTH

MOLEX PN	ENGINEERING NO	LENGTH M [FT]
1300280003	DND32A-M006	0.6 [1.97]
1300280080	DND32A-M002	0.2 [.66]
1300280081	DND32A-M003	0.3 [.98]
1300280082	DND32A-M004	0.4 [1.31]
1300280083	DND32A-M005	0.5 [1.64]
1300280084	DND32A-M007	0.7 [2.30]
1300280085	DND32A-M010	1.0 [3.28]
1300280086	DND32A-M015	1.5 [4.92]
1300280088	DND32A-M025	2.5 [8.20]
1300280089	DND32A-M030	3.0 [9.84]
1300280091	DND32A-M050	5.0 [16.4]

ITEM	DESCRIPTION	MATERIAL	FINISH/COLOR	
10	WRAP LABEL	VINYL	YELLOW	
9	O-RING	FPM (VITON)	RED	
8	COUPLING NUT FEMALE M12	ZINC DIE CAST	BLACK E-COAT	C
7	CONTACT FEMALE	Cu ALLOY	GOLD PLATED	
6	INSERT M12 5P FEMALE	NYLON	BLACK	
5	COUPLING NUT MALE M12	ZINC DIE CAST	BLACK E-COAT	C
4	CONTACT PIN	Cu ALLOY	GOLD PLATED	
3	INSERT M12 5P MALE AC KEY	NYLON	BLACK	
2	OVERMOLDS	TPC	GRAY	
1	DEV-NET DROP CABLE 4x0.34mm² (22AWG)	PVC JACKET	GRAY	

NOTES:
1. MATERIAL: AS NOTED
2. FINISH: AS NOTED
3. ELECTRICAL:
   VOLTAGE; 60V AC/DC (C)
   CURRENT: 4A
4. TEMP RATING: -20°TO +80°C
5. PROTECTION: IP67 (WHEN MATED)
6. COUPLING THREAD: M12 X 1.0
7. UL LISTED FILE: E152210
   CANADIAN LISTED FILE: LR6837
8. ALL DIMS ARE FOR REFERENCE UNLESS TOLERANCED OR NOTED OTHERWISE

DOCUMENT STATUS	P1	RELEASE DATE	2024/09/19 14:11:32

THIS DRAWING CONTAINS INFORMATION THAT IS PROPRIETARY TO MOLEX ELECTRONIC TECHNOLOGIES, LLC AND SHOULD NOT BE USED WITHOUT WRITTEN PERMISSION

FUNCTIONAL SYMBOLS: FA = 0, FC = 0, FP = 0
DIVISIONAL SYMBOLS

DIMENSION UNITS: MM/INCH
SCALE: 1.5:1
GENERAL TOLERANCES (UNLESS SPECIFIED)

	MM	INCH
4 PLACES	±	±
3 PLACES	±	±
2 PLACES	±	±
1 PLACE	±	±
0 PLACES	±	±
ANGULAR TOL	± °	

DRAFT WHERE APPLICABLE MUST REMAIN WITHIN DIMENSIONS

CURRENT REV DESC: CHANGE VOLTAGE RATING, FROM 250V TO 60V. ITEM-5 & 8 MATERIAL UPDATED.

EC NO: 791028
DRWN: ABENJAMINLW 2024/06/02
CHK'D: LESPINOZA 2024/07/08
APPR: BWOODMAN 2024/09/19

INITIAL REVISION:
DRWN: MKOWALCZYK01 2018/10/09
APPR: MIWASIECZKO 2018/10/12

THIRD ANGLE PROJECTION | DRAWING: C-SIZE | SERIES: 130028

molex

MICRO-CHANGE EXT CORD DEV-NET DROP MALE90/FEMALE STR, 22AWG

PRODUCT CUSTOMER DRAWING

DOCUMENT NUMBER	DOC TYPE	DOC PART	REVISION
1300280080	PSD	000	C

MATERIAL NUMBER	CUSTOMER	SHEET NUMBER
SEE P/N CHART	GENERAL MARKET	1 OF 1

FORMAT: Eng-tega-master-tb-prod-C
REVISION: E1
DATE: 2021/05/21

MALE FACE VIEW

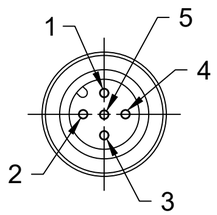

MATERIAL NUMBER	ENGINEERING NUMBER	FINISHED LENGTH
1300280083	DND32A-M005	0.5M [1FT 8 IN]
1300280089	DND32A-M030	3M [9FT 10 IN]
1300280091	DND32A-M050	5M [16FT 5 IN]

(C)

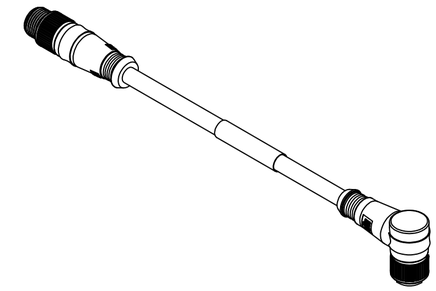

FEMALE FACE VIEW

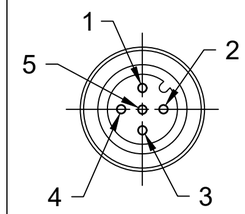

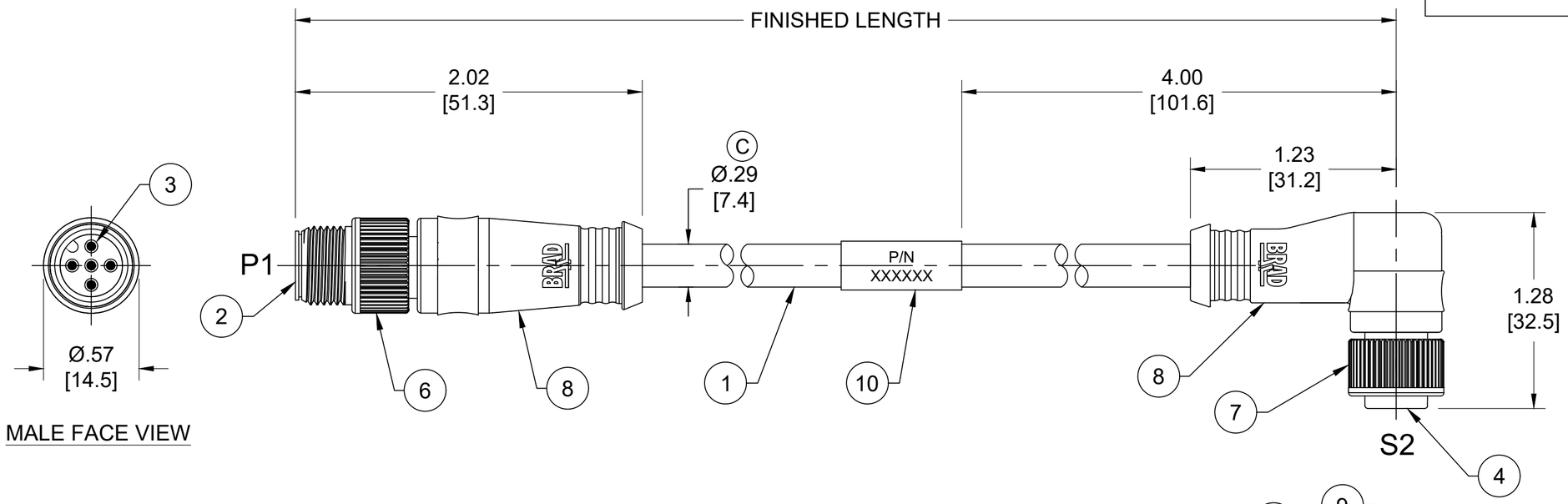

MALE FACE VIEW

NOTES:

1. MATERIAL: AS NOTED
2. FINISH: AS NOTED
3. ELECTRICAL:
   VOLTAGE : 60V AC/DC (C)
   CURRENT: 4A
4. TEMP RATING: -20° TO +80°C
5. PROTECTION: IP67 (WHEN MATED)
6. COUPLING THREAD: M12X1
7. UL LISTED FILE: E152210 (C)
   CSA CERTIFIED FILE: LR6837
8. ALL DIMENSIONS ARE FOR REFERENCE
   UNLESS TOLERACED OR NOTED OTHERWISE

PART NUMBER LEGEND

DND32A-M005

FINISHED LENGTH:
M005= 0.5 METER
M010= 1 METER
M100= 10 METER

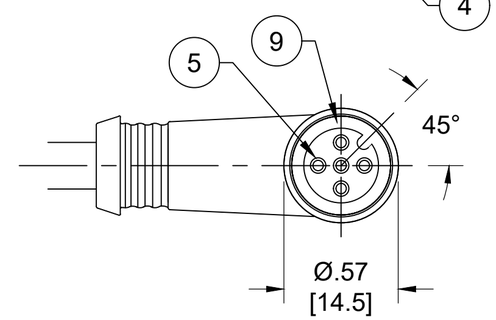

FEMALE FACE VIEW

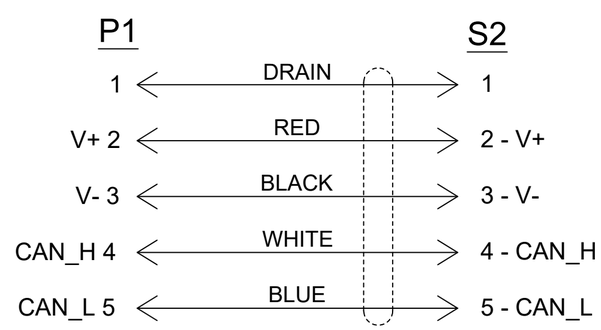

SCHEMATIC

(C)

CABLE LENGTH TOLERANCES
<.3M [1FT]: +19mm-0 [+.75in-0]
.3 - .9M [1 - 3FT]: +44.5mm-0 [+1.75in-0]
.9 - 1.8M [3 - 6FT]: +55.6mm-0 [+2.19in-0]
1.8 - 3.7M [6 - 12FT: +88.9mm-0 [+3.50in-0]
3.7 - 7.3M [12 - 24FT]: +165.1mm-0 [+6.50in-0]
7.3-14.6M [24 - 48FT]: +317.5mm-0 [+12.50in-0]
14.6 - 30.5M [48-100FT]: +622.3mm-0 [+24.50in-0]
OVER 30M [100FT] +2% OF FINISHED LENGTH

ITEM	COMPONENT	MATERIAL	FINISH	
10	WRAP LABEL	VINYL	YELLOW	
9	O-RING	NITRILE	RED	(C)
8	OVERMOLDS	TPC	GRAY	(C)
7	FEMALE COUPLING NUT	ZINC DIE CAST	BLACK E-COAT	
6	MALE COUPLING NUT	ZINC DIE CAST	BLACK E-COAT	
5	CONTACT SOCKET	COPPER ALLOY	GOLD PLATED	
4	FEMALE INSERT	NYLON	BLACK	
3	CONTACT PIN	COPPER ALLOY	GOLD PLATED	
2	MALE INSERT	NYLON	BLACK	
1	DEVICENET DROP CABLE, #22 AWG	PVC JACKET	GRAY	

THIS DRAWING CONTAINS INFORMATION THAT IS PROPRIETARY TO MOLEX ELECTRONIC TECHNOLOGIES, LLC AND SHOULD NOT BE USED WITHOUT WRITTEN PERMISSION

FUNCTIONAL SYMBOLS: FA=0, FC=0, FP=0
DIVISIONAL SYMBOLS

DIMENSION UNITS: INCH/MM
SCALE: NTS

GENERAL TOLERANCES (UNLESS SPECIFIED)

	mm	INCH
4 PLACES	±----	±----
3 PLACES	±----	±----
2 PLACES	±----	±----
1 PLACE	±----	±----
0 PLACES	±----	±----
ANGULAR TOL ± ---- °		

DRAFT WHERE APPLICABLE MUST REMAIN WITHIN DIMENSIONS

CURRENT REV DESC: CHANGED VOLTAGE RATING FROM 250V TO 60V. ITEM-8 WAS PVC. ADDED ITEM-9, UL, CSA, CABLE DIA & CABLE LEGTH TOL CHART. MODIFIED PN CHART

EC NO: 796482
DRWN: ABENJAMINLW 2024/07/10
CHK'D: LESPINOZA 2024/08/27
APPR: BWOODMAN 2024/09/19

INITIAL REVISION:
DRWN: VOU 2009/08/04
APPR: JFMURPHY 2009/08/10

THIRD ANGLE PROJECTION | DRAWING: C-SIZE | SERIES: 130028

molex

MICRO-CHANGE DEVICE-NET, M12
5 POLE, MALE STR/FEMALE 90DEG, #22/4 SHLD
PVC -THIN STD

PRODUCT CUSTOMER DRAWING

DOCUMENT NUMBER	DOC TYPE	DOC PART	REVISION
SD-130028-002	PSD	001	C

MATERIAL NUMBER	CUSTOMER	SHEET NUMBER
SEE CHART	GENERAL MARKET	1 OF 1

DOCUMENT STATUS	P1	RELEASE DATE	2024/09/19 14:13:03

FORMAT: IN-ACAD-tb-prod-C
REVISION: C
DATE: 2022/10/04