MATERIAL NUMBER	ENGINEERING NUMBER	FINISHED LENGTH
1300270047	DND20A-M005	0.5M [1FT 8 IN]
1300270057	DND20A-M150	15M [49FT 3 IN
1300270158	DND20A-M300	30M [98FT 5 IN]

PART NUMBER LEGEND

DND20A-M005

FINISHED LENGTH:
M005 = 0.5 METER
M010 = 1 METER
M100 = 10 METER

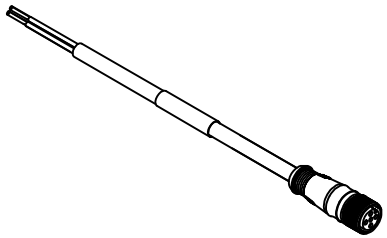

FEMALE- FACE VIEW

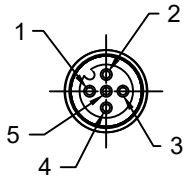

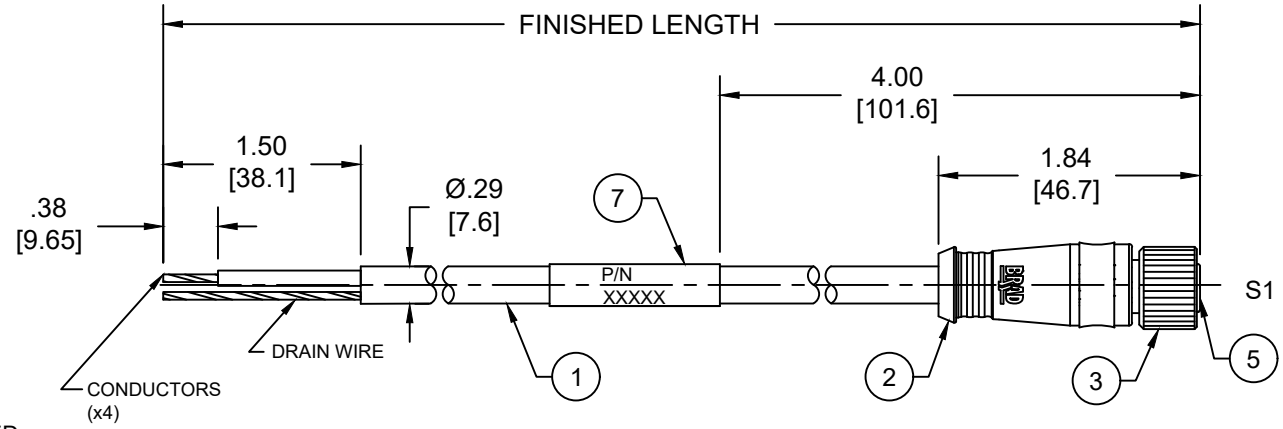

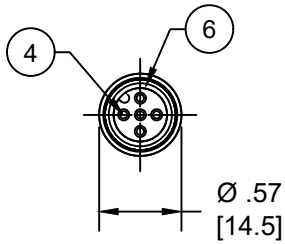

FEMALE- FACE VIEW

NOTES:

1. MATERIAL: AS NOTED
2. FINISH: AS NOTED
3. ELECTRICAL:
   VOLTAGE: 60V (C)
   CURRENT: 4 AMPS
4. TEMP RATING: -20°C TO +80°C
5. PROTECTION: IP67 (WHEN MATED)
6. COUPLING THREAD: M12 X 1
7. UL LISTED FILE: E152210
   CSA CERTIFIED FILE: LR6837
8. ALL DIMENSIONS ARE FOR REFERENCE UNLESS TOLERANCED OR NOTED OTHERWISE

SCHEMATIC

S1

DRAIN	1
RED	2 - V+
BLACK	3 - V-
WHITE	4 - CAN_H
BLUE	5 - CAN_L

CABLE LENGTH TOLERANCES
<.3M [1FT]: +19mm-0 [+.75in-0]
.3 - .9M [1 - 3FT]: +44.5mm-0 [+1.75in-0]
.9 - 1.8M [3 - 6FT]: +55.6mm-0 [+2.19in-0]
1.8 - 3.7M [6 - 12FT: +88.9mm-0 [+3.50in-0]
3.7 - 7.3M [12 - 24FT]: +165.1mm-0 [+6.50in-0]
7.3-14.6M [24 - 48FT]: +317.5mm-0 [+12.50in-0]
14.6 - 30.5M [48-100FT]: +622.3mm-0 [+24.50in-0]
OVER 30M [100FT] +2% OF FINISHED LENGTH

ITEM	COMPONENT	MATERIAL	FINISH
7	WRAP LABEL	VINYL	YELLOW
6	O-RING	NITRILE	RED
5	INSERT	NYLON	BLACK
4	SOCKET CONTACT	COPPER ALLOY	GOLD OVER NICKEL
3	COUPLNG NUT	ZINC DIE CAST	BLACK E-COATED
2	OVERMOLD	TPC	GRAY
1	CABLE #22 AWG DEVICENET	PVC JACKET	GRAY

(C)

THIS DRAWING CONTAINS INFORMATION THAT IS PROPRIETARY TO MOLEX ELECTRONIC TECHNOLOGIES, LLC AND SHOULD NOT BE USED WITHOUT WRITTEN PERMISSION

FUNCTIONAL SYMBOLS: FA=0, FC=0, FP=0
DIVISIONAL SYMBOLS

DIMENSION UNITS: INCH/MM
SCALE: NTS

GENERAL TOLERANCES (UNLESS SPECIFIED)

	mm	INCH
4 PLACES	±----	±----
3 PLACES	±----	±----
2 PLACES	±----	±----
1 PLACE	±----	±----
0 PLACES	±----	±----
ANGULAR TOL ±	---- °	

DRAFT WHERE APPLICABLE MUST REMAIN WITHIN DIMENSIONS

CURRENT REV DESC: CHANGED VOLTAGE RATING FROM 250V TO 60V. ITEM-7 FINISH CHANGED FROM BLACK/YELLOW TO YELLOW

EC NO: 796482
DRWN: ABENJAMINLW 2024/07/10
CHK'D: LESPINOZA 2024/08/27
APPR: BWOODMAN 2024/09/19

INITIAL REVISION:
DRWN: TWOLDEGE 2010/01/06
APPR: JFMURPHY 2010/01/20

THIRD ANGLE PROJECTION | DRAWING: A-SIZE | SERIES: 130027

molex

MICRO-CHANGE DEVICENET, M12,
5 POLE, FEMALE, STRAIGHT, SINGLE KEY,
#22 AWG

PRODUCT CUSTOMER DRAWING

DOCUMENT NUMBER	DOC TYPE	DOC PART	REVISION
SD-130027-007	PSD	001	C

MATERIAL NUMBER	CUSTOMER	SHEET NUMBER
SEE CHART	GENERAL MARKET	1 OF 1

DOCUMENT STATUS	P1	RELEASE DATE	2024/09/19 14:13:02

FORMAT: IN-ACAD-tb-prod-A
REVISION: B
DATE: 2020/01/14