MATERIAL NO.	ENGINEERING NO.	FINISHED LENGTH
1300250321	DND91A-M005	1 FT 7.7 IN (0.5 M)
1300250631	DND91A-M150	49 FT 2.5 IN (15 M)
1300250633	DND91A-M300	98 FT 5 IN (30 M)

PART NO. LEGEND
DND91A-M010
FINISHED LENGTH
M005= 0.5 METER
M010= 1 METER
M100= 10 METER

WIRING DIAGRAM

P1		S2
1	DRAIN	1
2	RED	2
3	BLACK	3
4	WHITE	4
5	BLUE	5

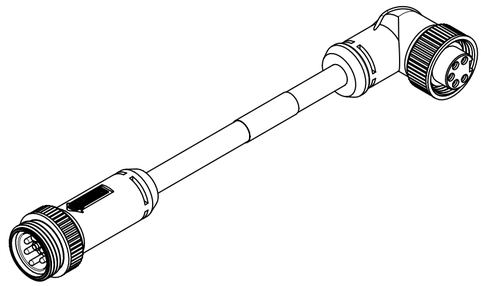

CABLE LENGTH TOLERANCES
<.3M [1FT]: +19mm-0 [+.75in-0]
.3 - .9M [1 - 3FT]: +44.5mm-0 [+1.75in-0]
.9 - 1.8M [3 - 6FT]: +55.6mm-0 [+2.19in-0]
1.8 - 3.7M [6 - 12FT: +88.9mm-0 [+3.50in-0]
3.7 - 7.3M [12 - 24FT]: +165.1mm-0 [+6.50in-0]
7.3-14.6M [24 - 48FT]: +317.5mm-0 [+12.50in-0]
14.6 - 30.5M [48-100FT]: +622.3mm-0 [+24.50in-0]
OVER 30M [100FT] +2% OF FINISHED LENGTH

NOTES:
1. MATERIAL: AS NOTED
2. FINISH: AS NOTED
3. ELECTRICAL SPECIFICATIONS
   VOLTAGE RATING: 300V PER IEC60664
   300V PER UL
   CURRENT RATING: 4A
4. TEMP RANGE: -20°C TO +80°C
5. PROTECTION: IP67 (WHEN MATED)
6. UL RECOGNIZED FILE: E152210
   CSA CERTIFIED FILE: LR6837
7. ALL DIMS SHOWN ARE FOR REFERENCE UNLESS TOLERANCED OR NOTED OTHERWISE

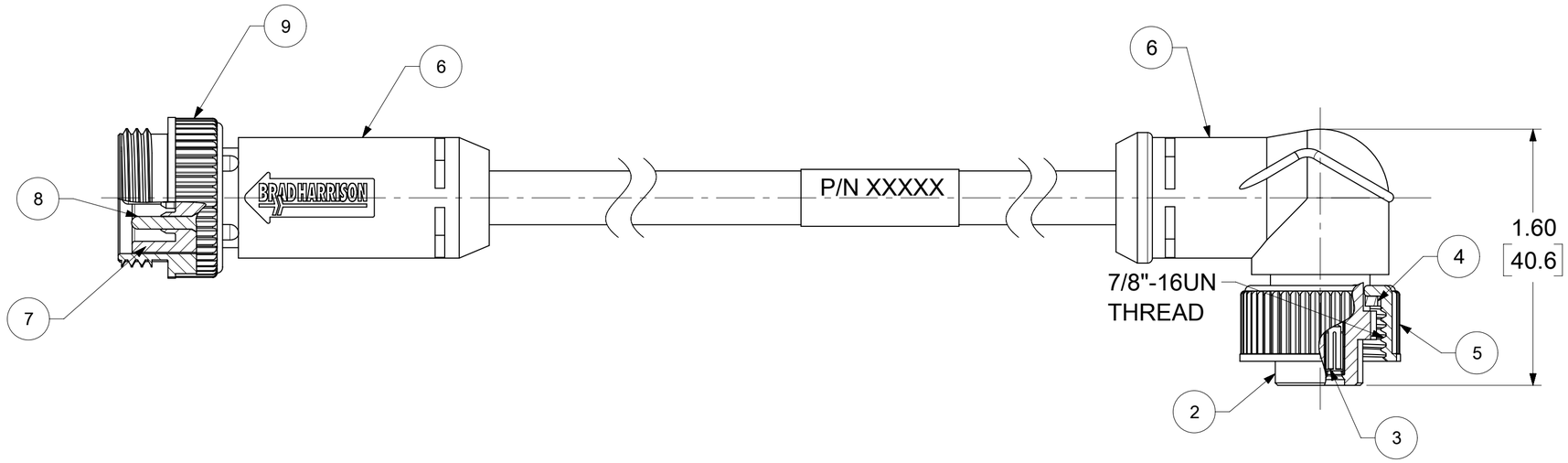

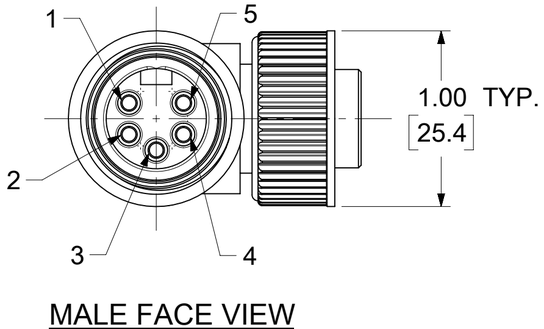

MALE FACE VIEW

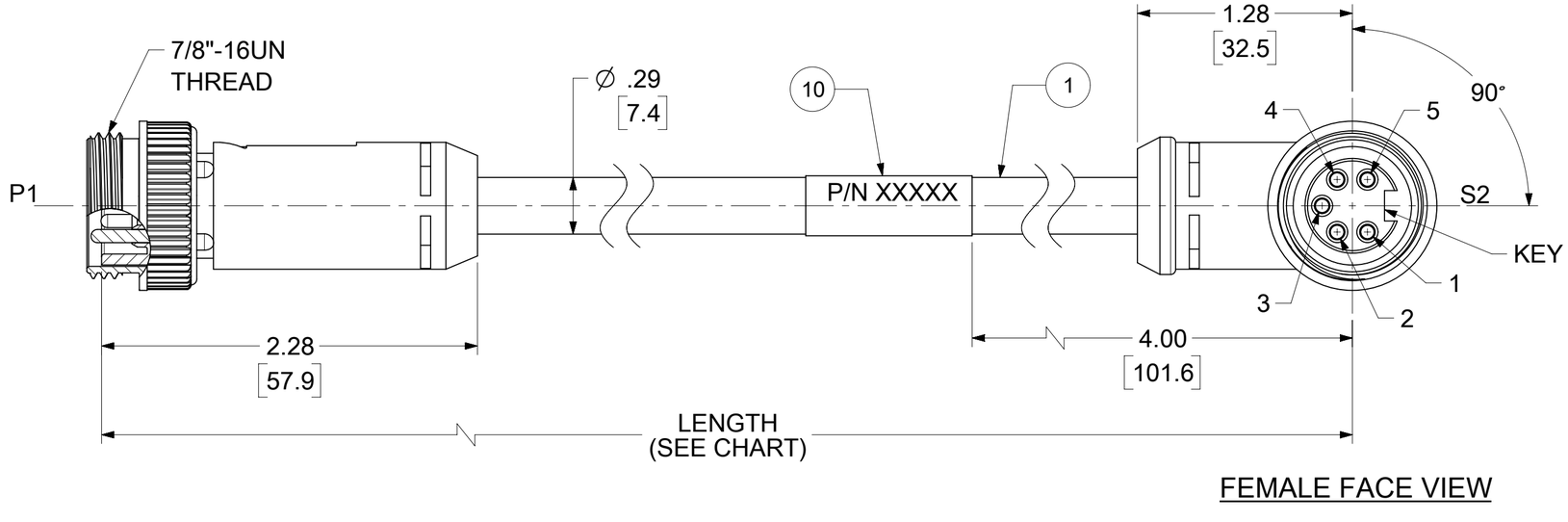

FEMALE FACE VIEW

ITEM	DESCRIPTION	MATERIAL	FINISH	
10	WRAP LABEL	VINYL	BLACK/YELLOW	
9	COUPLING NUT, MALE	ZINC DIE-CAST	BLACK E-COAT	
8	PIN CONTACT	COPPER ALLOY	GOLD PLATED	
7	INSERT, MALE, 5 POLE	TPE	BLACK	C
6	OVERMOLD	TPE	GRAY	
5	COUPLING NUT, FEMALE	ZINC DIE-CAST	BLACK E-COAT	
4	FRICTION RING	NYLON	WHITE	
3	SOCKET CONTACT	COPPER ALLOY	GOLD PLATED	
2	INSERT, FEMALE, 5 POLE	TPE	BLACK	C
1	CABLE, DEV-NET, DROP, 4/22	PVC JACKET	GRAY	

DOCUMENT STATUS	P1	RELEASE DATE	2025/03/06 18:28:05

FUNCTIONAL SYMBOLS
FA = 0
FC = 0
FP = 0
DIVISIONAL SYMBOLS

THIS DRAWING CONTAINS INFORMATION THAT IS PROPRIETARY TO MOLEX ELECTRONIC TECHNOLOGIES, LLC AND SHOULD NOT BE USED WITHOUT WRITTEN PERMISSION

DIMENSION UNITS: INCH/MM
SCALE: NTS

GENERAL TOLERANCES (UNLESS SPECIFIED)

	MM	INCH
4 PLACES	±	±
3 PLACES	±	±
2 PLACES	±	±
1 PLACE	±	±
0 PLACES	±	±
ANGULAR TOL	± °	

DRAFT WHERE APPLICABLE MUST REMAIN WITHIN DIMENSIONS

CURRENT REV DESC: INSERTS COLOR REPLACED TO BLACK FROM GRAY.

EC NO: 732099
DRWN: VBASUTHKARP 2022/07/18
CHK'D: PDODDAMANEMY 2024/03/28
APPR: BWOODMAN 2025/03/06

INITIAL REVISION:
DRWN: RSTONE 2009/07/31
APPR: JFMURPHY 2009/08/10

THIRD ANGLE PROJECTION | DRAWING: C-SIZE | SERIES: 130025

molex

MINI-CHANGE DEVICENET, A-SIZE
5 POLE, MALE-STR, FEMALE-90 DEG, SINGLE KEY, 22 AWG

PRODUCT CUSTOMER DRAWING

DOCUMENT NUMBER	DOC TYPE	DOC PART	REVISION
SD-130025-021	PSD	001	C

MATERIAL NUMBER	CUSTOMER	SHEET NUMBER
SEE TABLE	GENERAL MARKET	1 OF 1

FORMAT: Eng-tega-master-tb-prod-C
REVISION: E
DATE: 2020/01/14