MATERIAL NO.	ENGINEERING NO.	FINISHED LENGTH
1300250543	DND99A-M010	1M (3 FT 3.37 IN)
1300250544	DND99A-M030	3M (9 FT 10.11 IN)
1300250545	DND99A-M050	5M (16 FT 4.85IN)

(B)

PART NO. LEGEND (B)

DND99A-M010

FINISHED LENGTH
M005= 0.5 METER
M010= 1 METER
M100= 10 METER

WIRING DIAGRAM

P1		S2
1	DRAIN	1
2	RED	2
3	BLACK	3
4	WHITE	4
5	BLUE	5

(B)

CABLE LENGTH TOLERANCES
<.3M [1FT]: +19mm-0 [+.75in-0]
.3 - .9M [1 - 3FT]: +44.5mm-0 [+1.75in-0]
.9 - 1.8M [3 - 6FT]: +55.6mm-0 [+2.19in-0]
1.8 - 3.7M [6 - 12FT: +88.9mm-0 [+3.50in-0]
3.7 - 7.3M [12 - 24FT]: +165.1mm-0 [+6.50in-0]
7.3-14.6M [24 - 48FT]: +317.5mm-0 [+12.50in-0]
14.6 - 30.5M [48-100FT]: +622.3mm-0 [+24.50in-0]
OVER 30M [100FT] +2% OF FINISHED LENGTH

NOTES:
1. MATERIAL: AS NOTED
2. FINISH: AS NOTED
3. ELECTRICAL SPECIFICATIONS
   VOLTAGE RATING: 300V PER IEC60664 (B)
   300V PER UL
   CURRENT RATING: 4A
4. TEMP RANGE: -20°C TO +80°C (B)
5. PROTECTION: IP67 (WHEN MATED)
6. CSA CERTIFIED FILE: LR6837 (B)
7. COUPLING THREADS: 7/8"-16UN
7. DIMS SHOWN ARE FOR REFERENCE UNLESS TOLERANCED OR NOTED OTHERWISE

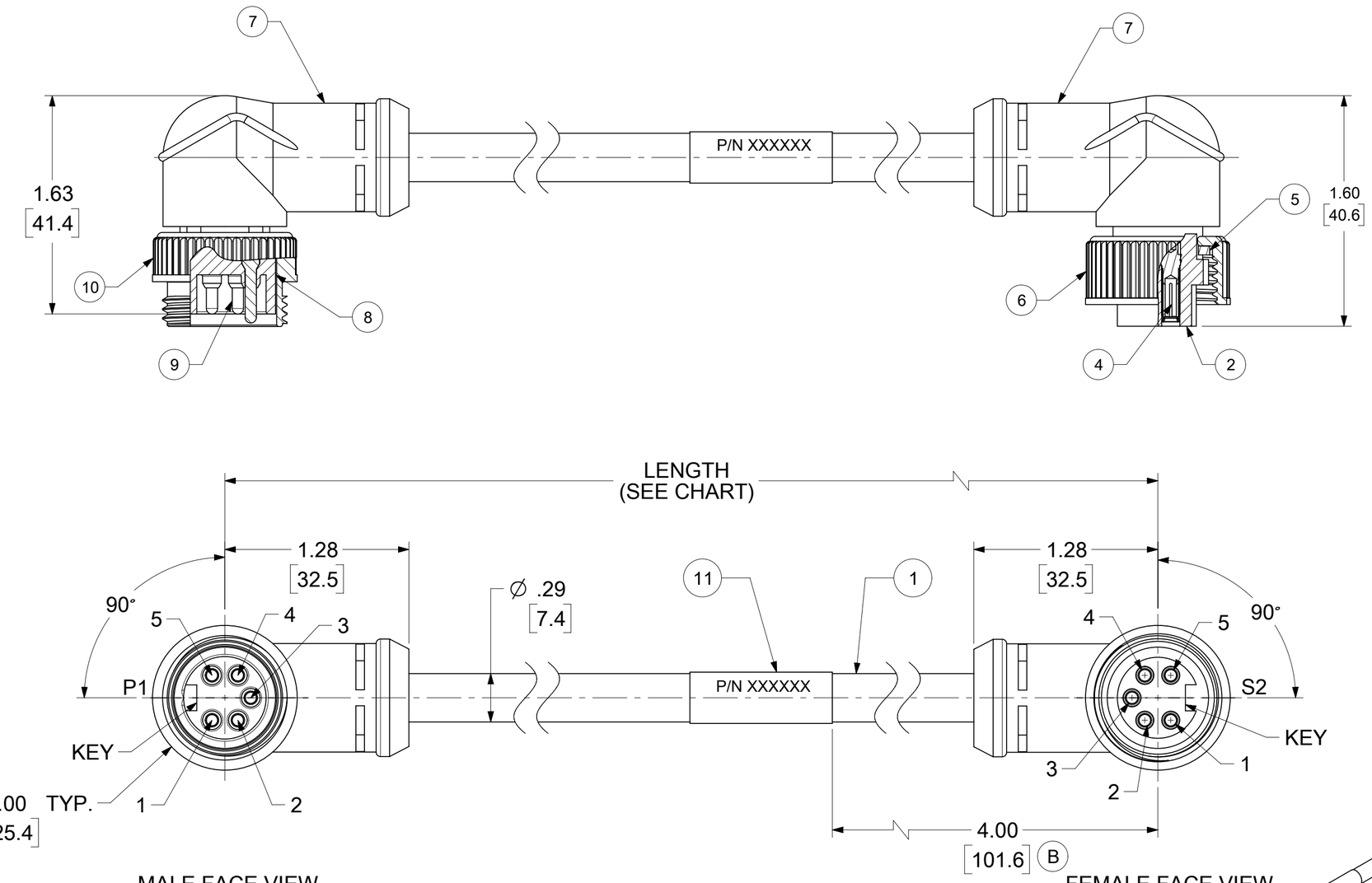

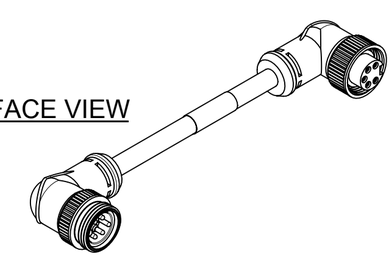

ITEM	DESCRIPTION	MATERIAL	FINISH	
11	WRAP LABEL	VINYL	BLACK/YELLOW	
10	COUPLING NUT, MALE	ZINC DIE-CAST	BLACK E-COAT	
9	PIN CONTACT	Cu ALLOY	GOLD PLATED	
8	INSERT, MALE, 5 POLE	TPE	BLACK	(B)
7	OVERMOLD	TPE	GRAY	(B)
6	COUPLING NUT, FEMALE	ZINC DIE-CAST	BLACK E-COAT	
5	FRICTION RING	NYLON	WHITE	
3	SOCKET CONTACT	Cu ALLOY	GOLD PLATED	
2	INSERT, FEMALE, 5 POLE	TPE	BLACK	(B)
1	CABLE, DEV-NET, DROP, 4/22	PVC JACKET	GRAY	

DOCUMENT STATUS	P1	RELEASE DATE	2025/03/06 18:28:06

THIS DRAWING CONTAINS INFORMATION THAT IS PROPRIETARY TO MOLEX ELECTRONIC TECHNOLOGIES, LLC AND SHOULD NOT BE USED WITHOUT WRITTEN PERMISSION

FUNCTIONAL SYMBOLS: FA = 0, FC = 0, FP = 0
DIVISIONAL SYMBOLS

DIMENSION UNITS: INCH/MM
SCALE: NTS

GENERAL TOLERANCES (UNLESS SPECIFIED)

	MM	INCH
4 PLACES	±	±
3 PLACES	±	±
2 PLACES	±	±
1 PLACE	±	±
0 PLACES	±	±
ANGULAR TOL	± °	

DRAFT WHERE APPLICABLE MUST REMAIN WITHIN DIMENSIONS

CURRENT REV DESC: ITEM 2, 7, & 8 WERE PVC, ADDED CSA, TEMP, P/N LEGEND, TOLERANCE & MATERIAL TABLE MODIFIED VOLT & UPDATED DIMS.

EC NO: 732099
DRWN: VBASUTHKARP 2022/07/18
CHK'D: PDODDAMANEMY 2024/03/28
APPR: BWOODMAN 2025/03/06

INITIAL REVISION:
DRWN: RSTONE 2009/07/30
APPR: JFMURPHY 2009/08/05

THIRD ANGLE PROJECTION

DRAWING: C-SIZE
SERIES: 130025

molex

MINI-CHANGE DEVICENET, A-SIZE
5 POLE, MALE/FEMALE, 90 DEG, SINGLE KEY, 22 AWG

PRODUCT CUSTOMER DRAWING

DOCUMENT NUMBER	DOC TYPE	DOC PART	REVISION
SD-130025-023	PSD	001	B

MATERIAL NUMBER	CUSTOMER	SHEET NUMBER
SEE TABLE	GENERAL MARKET	1 OF 1