PART NO.	ENGINEERING NO.	FINISHED LENGTH
1300240207	DND09A-M010	1M [3FT 3 IN]
1300240003	DND09A-M030	3M [9FT 10 IN]
1300240210	DND09A-M060	6M [19FT 8 IN]

B

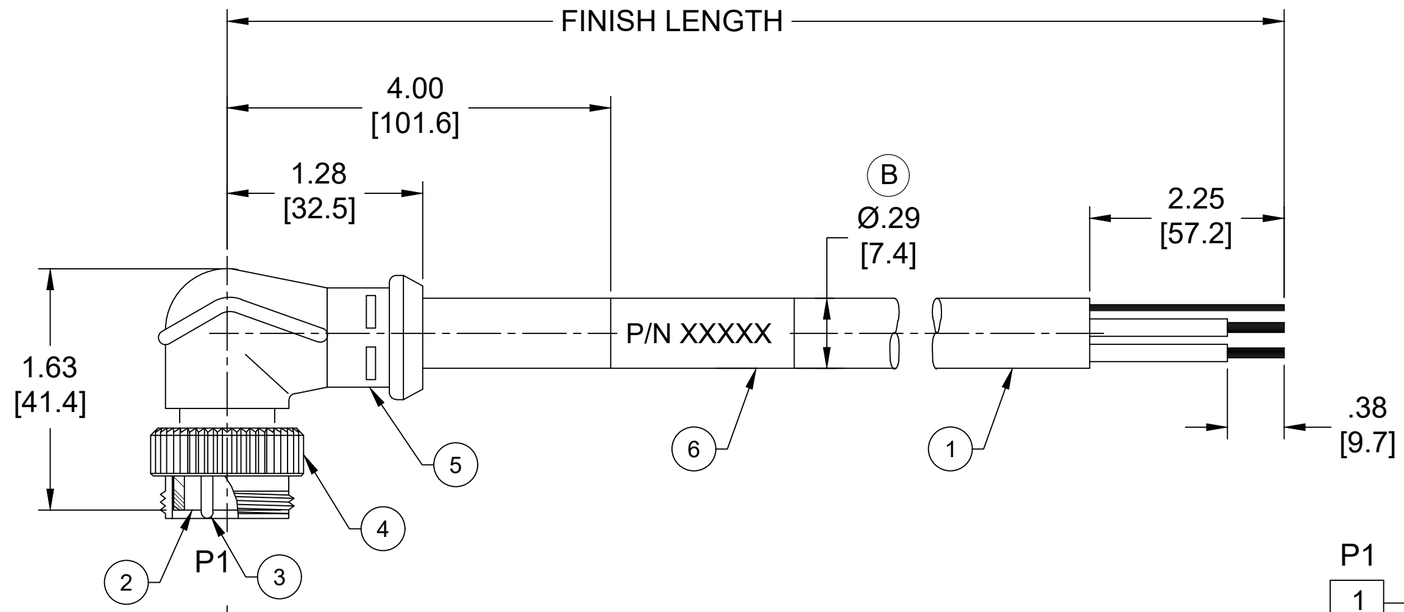

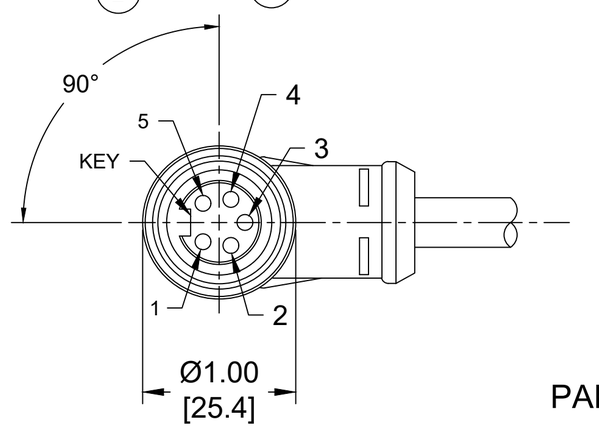

MALE FACE VIEW

P1

1	DRAIN
2	RED
3	BLACK
4	WHITE
5	BLUE

WIRING DIAGRAM

NOTES:

1. MATERIAL: AS NOTED
2. FINISH: AS NOTED
3. ELECTRICAL:
   VOLTAGE RATING PER IEC 60664: 300V
   VOLTAGE RATING PER UL: 300V
   CURRENT: 4A
4. TEMP RATING: -20° TO +80°C
5. PROTECTION: IP67 (WHEN MATED)
6. COUPLING THREAD: 7/8"-16UN
7. UL RECOGNIZED FILE: E152210
   CSA CERTIFIED FILE: LR6837
8. ALL DIMENSIONS ARE FOR REFERENCE UNLESS TOLERANCED OR NOTED OTHERWISE

PART NUMBER LEGEND

DND09A-M010

CABLE LENGTH
M005= 0.5 METER
M010= 1 METER
M100= 10 METER

B

CABLE LENGTH TOLERANCES
<.3M [1FT]: +19mm-0 [+.75in-0]
.3 - .9M [1 - 3FT]: +44.5mm-0 [+1.75in-0]
.9 - 1.8M [3 - 6FT]: +55.6mm-0 [+2.19in-0]
1.8 - 3.7M [6 - 12FT: +88.9mm-0 [+3.50in-0]
3.7 - 7.3M [12 - 24FT]: +165.1mm-0 [+6.50in-0]
7.3-14.6M [24 - 48FT]: +317.5mm-0 [+12.50in-0]
14.6 - 30.5M [48-100FT]: +622.3mm-0 [+24.50in-0]
OVER 30M [100FT] +2% OF FINISHED LENGTH

ITEM	COMPONENT	MATERIAL	FINISH
6	WRAP LABEL	VINYL	BLACK/YELLOW
5	OVERMOLD	TPE	GRAY
4	COUPLING NUT	ZINC DIE CAST	BLACK-E-COAT
3	CONTACT PIN	COPPER ALLOY	GOLD OVER NICKEL
2	INSERT	TPE	BLACK
1	CABLE 22 AWG, DEVICENET	PVC	GRAY

B B

THIS DRAWING CONTAINS INFORMATION THAT IS PROPRIETARY TO MOLEX ELECTRONIC TECHNOLOGIES, LLC AND SHOULD NOT BE USED WITHOUT WRITTEN PERMISSION

FUNCTIONAL SYMBOLS: FA=0, FC=0, FP=0
DIVISIONAL SYMBOLS

DIMENSION UNITS	SCALE
INCH/MM	NTS

GENERAL TOLERANCES (UNLESS SPECIFIED)

	mm	INCH
4 PLACES	±----	±----
3 PLACES	±----	±----
2 PLACES	±----	±----
1 PLACE	±----	±----
0 PLACES	±----	±----
ANGULAR TOL ± ---- °		

DRAFT WHERE APPLICABLE MUST REMAIN WITHIN DIMENSIONS

CURRENT REV DESC: ITEM #2 & #5 WERE PVC. ADDED CABLE DIA & TOL CHART. MODIFIED PN CHART

EC NO:	720800	
DRWN:	ABENJAMINLW	2022/06/23
CHK'D:	RSTONE	2022/09/09
APPR:	BWOODMAN	2022/09/09
INITIAL REVISION:		
DRWN:	EBRACKEN	2013/06/18
APPR:	BWOODMAN	2013/10/07

molex

MINI-CHANGE DEVICENET, A SIZE
5 POLE, MALE, 90DEG, SINGLE KEY,
#22/4 AWG

PRODUCT CUSTOMER DRAWING

DOCUMENT NUMBER	DOC TYPE	DOC PART	REVISION
SD-130024-017	PSD	001	B

THIRD ANGLE PROJECTION	DRAWING	SERIES	MATERIAL NUMBER	CUSTOMER	SHEET NUMBER
	C-SIZE	130024	SEE CHART	GENERAL MARKET	1 OF 1

DOCUMENT STATUS	P1	RELEASE DATE	2022/09/09 18:07:57

FORMAT: IN-ACAD-tb-prod-C
REVISION: B
DATE: 2020/01/14