MATERIAL NO.	ENGINEERING NO.	FINISHED LENGTH
1300101414	116030A01F030	3FT (0.9M)
1300101871	116030A01M030	9FT 10IN (3M)
1300101875	116030A01M060	19 FT 8.2 IN (6M)
1300102241	116030A01M092	30 FT 2.2 IN (9.2M)

A1

PART NO. MATRIX

116030A01M005

FINISHED LENGTH
F020=2 FEET
F200=20 FEET
M005= 0.5 METER
M010= 1 METER
M100= 10 METER

NOTES:
1. MATERIAL: AS NOTED
2. FINISH: AS NOTED
3. ELECTRICAL SPECIFICATIONS
   VOLTAGE RATING: 400V PER IEC60664
   600V PER UL2238
   CURRENT RATING: 8A
4. TEMP RANGE: -20°C TO +105°C
5. PROTECTION: IP67 (WHEN MATED)
6. UL RECOGNIZED FILE: E152210
   CSA CERTIFIED FILE: LR6837
7. ALL DIMS ARE FOR REFERENCE UNLESS TOLERANCED OR NOTED OTHERWISE

WIRING DIAGRAM

1	WHITE	1
2	RED	2
3	GREEN/YELLOW	3
4	ORANGE	4
5	BLACK	5
6	BLUE	6

CABLE LENGTH TOLERANCES
<.3M [1FT]: +19mm-0 [+.75in-0]
.3 - .9M [1 - 3FT]: +44.5mm-0 [+1.75in-0]
.9 - 1.8M [3 - 6FT]: +55.6mm-0 [+2.19in-0]
1.8 - 3.7M [6 - 12FT: +88.9mm-0 [+3.50in-0]
3.7 - 7.3M [12 - 24FT]: +165.1mm-0 [+6.50in-0]
7.3-14.6M [24 - 48FT]: +317.5mm-0 [+12.50in-0]
14.6 - 30.5M [48-100FT]: +622.3mm-0 [+24.50in-0]
OVER 30M [100FT] +2% OF FINISHED LENGTH

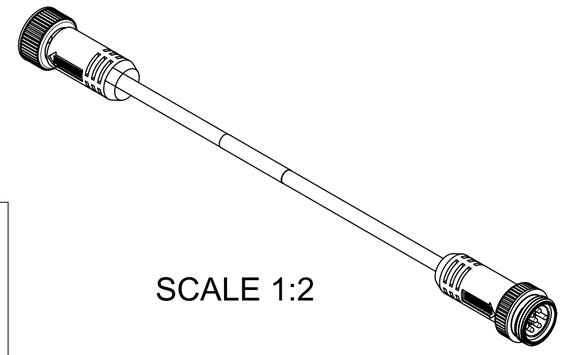

SCALE 1:2

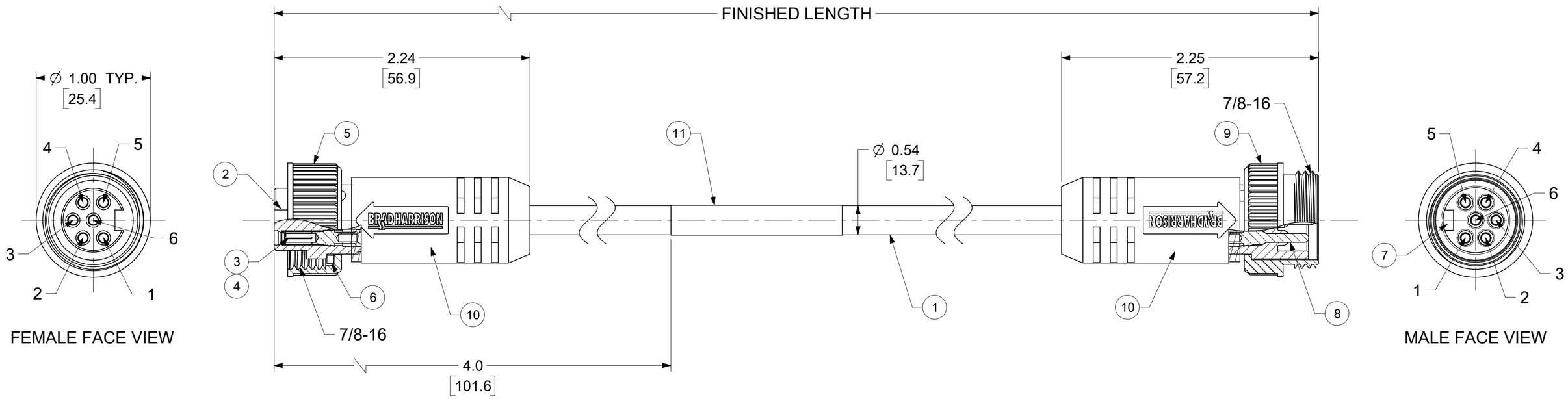

ITEM	DESCRIPTION	MATERIAL	FINISH
11	LABEL	VINYL	BLACK/YELLOW
10	OVERMOLD	TPE	YELLOW
9	COUPLING NUT, MALE	ZINC DIE-CAST	BLACK E-COAT
8	CONTACT PIN	COPPER ALLOY	SELECTIVE GOLD/NICKEL
7	MALE INSERT	TPE	YELLOW
6	FRICTION RING	NYLON	NATURAL
5	COUPLING NUT, FEMALE	ZINC DIE-CAST	BLACK E-COAT
4	SLEEVE	STAINLESS STEEL	-
3	CONTACT SOCKET	COPPER ALLOY	SELECTIVE GOLD/NICKEL
2	FEMALE INSERT	TPE	YELLOW
1	CABLE, 16/6 AWG	PVC JACKET	YELLOW

DOCUMENT STATUS	P1	RELEASE DATE	2021/06/10 21:05:25

THIS DRAWING CONTAINS INFORMATION THAT IS PROPRIETARY TO MOLEX ELECTRONIC TECHNOLOGIES, LLC AND SHOULD NOT BE USED WITHOUT WRITTEN PERMISSION

DIMENSION UNITS: INCH/MM
SCALE: 1.5:1

GENERAL TOLERANCES (UNLESS SPECIFIED)

	MM	INCH
4 PLACES	±	±
3 PLACES	±	±
2 PLACES	±	±
1 PLACE	±	±
0 PLACES	±	±
ANGULAR TOL	± °	

DRAFT WHERE APPLICABLE MUST REMAIN WITHIN DIMENSIONS

CURRENT REV DESC: ADDED NEW PART NUMBER

EC NO: 666758
DRWN: ALEON01 2021/06/10
CHK'D: MZIELINSKI 2021/06/10
APPR: BWOODMAN 2021/06/10

INITIAL REVISION:
DRWN: VBASUTHKARP 2020/10/14
APPR: BWOODMAN 2020/11/18

THIRD ANGLE PROJECTION | DRAWING: C-SIZE | SERIES: 130010

molex

MINI-CHANGE CORDSET, A SIZE
6 POLE, MALE-FEMALE, STRAIGHT, SINGLE KEY, 16 AWG

PRODUCT CUSTOMER DRAWING

DOCUMENT NUMBER	DOC TYPE	DOC PART	REVISION
1300101869	PSD	000	A1

MATERIAL NUMBER	CUSTOMER	SHEET NUMBER
SEE TABLE	GENERAL MARKET	1 OF 1

FORMAT: Eng-lega-master-tb-prod-C
REVISION: B
DATE: 2020/11/4