MATERIAL NO.	ENGINEERING NO.	FINISHED LENGTH
1300060219	103000A01F0302	3 FT. (0.91 M)
1300060256	103000A01F4002	40 FT. (12.19 M)
1300062250	103000A01F8002	80 FT. (24.38 M)

B

CABLE LENGTH TOLERANCES
<.3M [1FT]: +19mm-0 [+.75in-0]
.3 - .9M [1 - 3FT]: +44.5mm-0 [+1.75in-0]
.9 - 1.8M [3 - 6FT]: +55.6mm-0 [+2.19in-0]
1.8 - 3.7M [6 - 12FT: +88.9mm-0 [+3.50in-0]
3.7 - 7.3M [12 - 24FT]: +165.1mm-0 [+6.50in-0]
7.3-14.6M [24 - 48FT]: +317.5mm-0 [+12.50in-0]
14.6 - 30.5M [48-100FT]: +622.3mm-0 [+24.50in-0]
OVER 30M [100FT] +2% OF FINISHED LENGTH

B

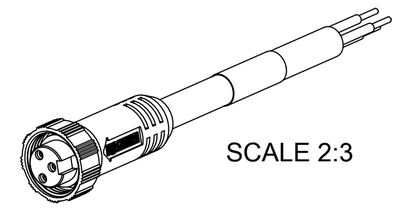

SCALE 2:3

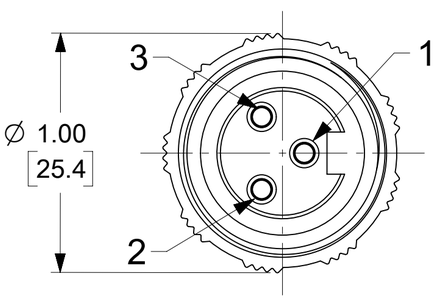

FEMALE FACE VIEW

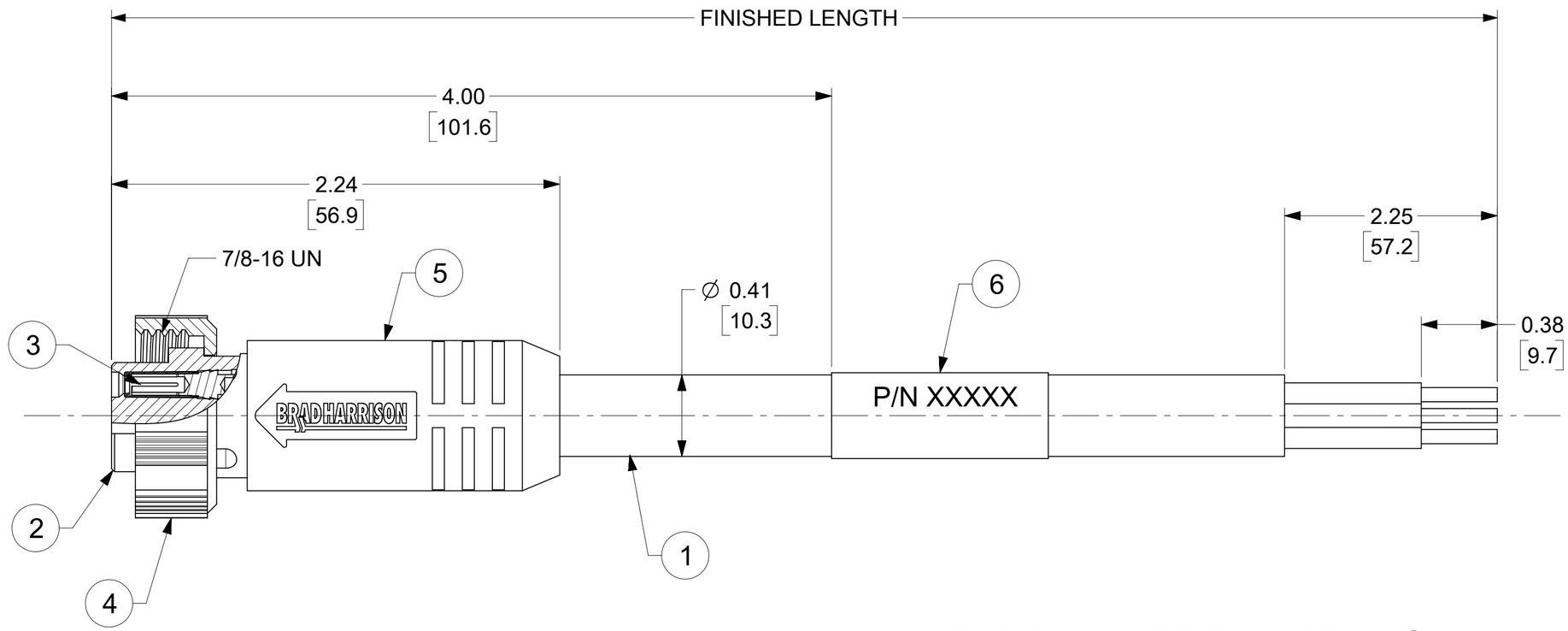

NOTES:
1. MATERIAL: AS NOTED
2. FINISH: AS NOTED
3. ELECTRICAL:
   VOLTAGE: 500V PER IEC60664 B
   600V PER UL2238
   CURRENT: 13A
4. TEMP RATING: -20°C TO +105°C B
5. PROTECTION: IP67 (WHEN MATED)
6. CSA CERTIFIED FILE: LR6837 B
7. UL RECOGNIZED FILE: E152210
8. ASSEMBLY IS ROHS COMPLIANT
9. ALL DIMS ARE FOR REFERENCE UNLESS TOLERANCED OR NOTED OTHERWISE

WIRING DIAGRAM

1	GREEN/YELLOW
2	BLACK
3	WHITE

PART NUMBER MATRIX B

103000A01F0602

FINISHED LENGTH
F001= .1 FT
F020= 2 FT
F200= 20 FT

ITEM	DESCRIPTION	MATERIAL	FINISH	
6	WRAP LABEL	VINYL	BLACK/YELLOW	
5	OVERMOLD	TPE	YELLOW	B
4	COUPLING NUT	NYLON	GRAY	
3	SOCKET CONTACT	Cu ALLOY	GOLD OVER NICKEL	
2	FEMALE INSERT	TPE	YELLOW	B
1	#16-3 YELLOW STOOW/ST	PVC JACKET	YELLOW	

DOCUMENT STATUS	P1	RELEASE DATE	2021/08/27 14:24:14

FUNCTIONAL SYMBOLS
FA = 0
FC = 0
FP = 0
DIVISIONAL SYMBOLS

THIS DRAWING CONTAINS INFORMATION THAT IS PROPRIETARY TO MOLEX ELECTRONIC TECHNOLOGIES, LLC AND SHOULD NOT BE USED WITHOUT WRITTEN PERMISSION

DIMENSION UNITS: INCH/MM
SCALE: 2:1

GENERAL TOLERANCES (UNLESS SPECIFIED)

	MM	INCH
4 PLACES	±	±
3 PLACES	±	±
2 PLACES	±	± 0.01
1 PLACE	± 0.3	±
0 PLACES	±	±
ANGULAR TOL	± 2.0 °	

DRAFT WHERE APPLICABLE MUST REMAIN WITHIN DIMENSIONS

CURRENT REV DESC: UPDATED ITEM #2, 5 & DIA. ADDED CSA, UL, IEC VOLT & TEMP, TOL. CHART & PART NO. MATRIX. MODIFIED PN CHART

EC NO: 673727
DRWN: VHANDI 2021/05/21
CHK'D: RSTONE 2021/08/25
APPR: BWOODMAN 2021/08/27

INITIAL REVISION:
DRWN: RSTONE 2012/11/28
APPR: JFMURPHY 2013/03/01

THIRD ANGLE PROJECTION | DRAWING: C-SIZE | SERIES: 130006

molex

MINI-CHANGE CORDSET, A SIZE, 3 POLE
FEMALE, STRAIGHT, SINGLE KEY, 16 AWG

PRODUCT CUSTOMER DRAWING

DOCUMENT NUMBER	DOC TYPE	DOC PART	REVISION
SD-130006-047	PSD	001	B

MATERIAL NUMBER	CUSTOMER	SHEET NUMBER
SEE TABLE	GENERAL MARKET	1 OF 1

FORMAT: Eng-tega-master-lb-prod-C
REVISION: E
DATE: 2020/01/14