MATERIAL NUMBER	ENG. PART NO.	FINISHED LENGTH
1300062166	104000K12M020	2M
1300060895	104000K12M050	5M
1300060897	104000K12M100	10M
1300069044	104000K12M200	20M
1300069045	104000K12M300	30M

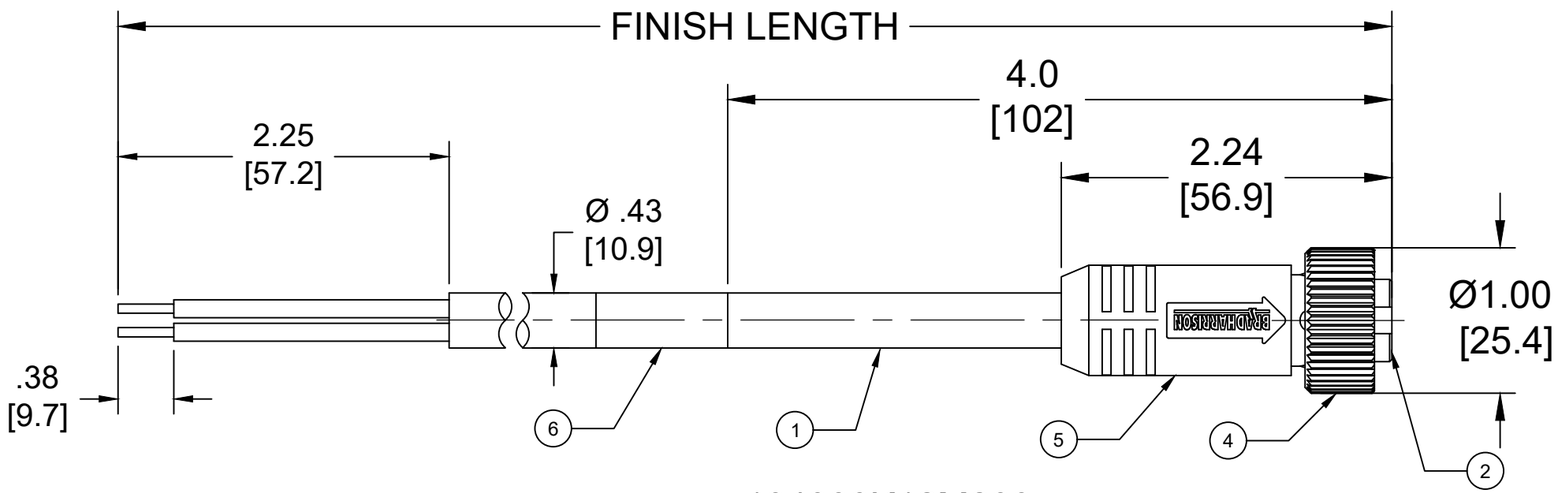

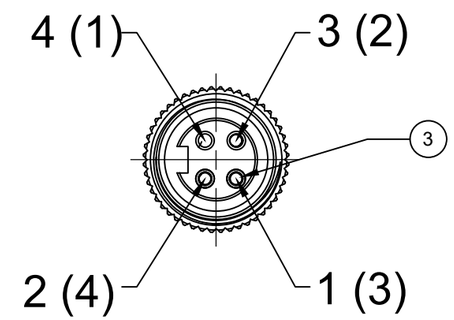

FEMALE FACE VIEW

104000K12M200

cable type
16AWG-4
FLEX TPE

cable length
005 = 0.5 Meters
010 = 1 Meter
100 = 10Meters

NOTES:
1. MATERIAL: AS NOTED
2. FINISH: AS NOTED
3. ELECTRICAL:
   VOLTAGE: 320V PER IEC60664
   600V PER UL2238
   CURRENT: 10A (D)
4. TEMP RATING: -20° TO +90°C
5. PROTECTION: IP67 (WHEN MATED)
6. COUPLING THREAD: 7/8-16UN
7. ALL DIMS ARE FOR REFERENCE
   UNLESS NOTED OTHERWISE

(D)

MECHANICAL CHARACTERISTICS:

TORSIONAL FLEX TEST	20 MILLION CYCLES PER MIL-C-13777G
BEND FLEX TEST	20 MILLION CYCLES PER MIL-C-13777G
WELD SLAG RESISTANCE	WOODHEAD STANDARD S-300

CENELEC EN 50 044 PINOUT SHOWN
(SAE-J-1738A SHOWN IN PARENTHESIS)

BLACK	4 (1)
BLUE	3 (2)
BROWN	1 (3)
WHITE	2 (4)

ITEM	DESCRIPTION	MATERIAL	FINISH
6	WRAP LABEL	VINYL	BLACK/YELLOW
5	OVERMOLD	TPE	YELLOW
4	COUPLING NUT	ZINC DIE-CAST	BLACK
3	CONTACT SOCKET	COPPER ALLOY	GOLD PLATED
2	FEMALE INSERT	TPE	YELLOW
1	CABLE, 16/4,600C, 90°C	TPE JACKET	YELLOW

(D)

CABLE LENGTH TOLERANCES
<.3M [1FT]: +19mm-0 [+.75in-0]
.3 - .9M [1 - 3FT]: +44.5mm-0 [+1.75in-0]
.9 - 1.8M [3 - 6FT]: +55.6mm-0 [+2.19in-0]
1.8 - 3.7M [6 - 12FT: +88.9mm-0 [+3.50in-0]
3.7 - 7.3M [12 - 24FT]: +165.1mm-0 [+6.50in-0]
7.3-14.6M [24 - 48FT]: +317.5mm-0 [+12.50in-0]
14.6 - 30.5M [48-100FT]: +622.3mm-0 [+24.50in-0]
OVER 30M [100FT] +2% OF FINISHED LENGTH

THIS DRAWING CONTAINS INFORMATION THAT IS PROPRIETARY TO MOLEX ELECTRONIC TECHNOLOGIES, LLC AND SHOULD NOT BE USED WITHOUT WRITTEN PERMISSION

FUNCTIONAL SYMBOLS: FA=0, FC=0, FP=0
DIVISIONAL SYMBOLS

DIMENSION UNITS: INCH/MM
SCALE: NTS

GENERAL TOLERANCES (UNLESS SPECIFIED)

	mm	INCH
4 PLACES	±----	±----
3 PLACES	±----	±----
2 PLACES	±----	±----
1 PLACE	±----	±----
0 PLACES	±----	±----
ANGULAR TOL ±	---- °	

DRAFT WHERE APPLICABLE MUST REMAIN WITHIN DIMENSIONS

CURRENT REV DESC: UPDATED AMPERAGE AND TEMPLATE

EC NO: 646474
DRWN: ALEON01 2020/10/14
CHK'D: CCHRASTKA 2020/10/19
APPR: BWOODMAN 2020/10/21
INITIAL REVISION:
DRWN: GGUSTAFS 2013/10/04
APPR: BWOODMAN 2013/11/12

THIRD ANGLE PROJECTION
DRAWING: B-SIZE
SERIES: 130006

molex

MINI CHANGE
4 POLE FEMALE STR 16 AWG AWG TPE

PRODUCT CUSTOMER DRAWING

DOCUMENT NUMBER	DOC TYPE	DOC PART	REVISION
SD-130006-062	PSD	001	D

MATERIAL NUMBER	CUSTOMER	SHEET NUMBER
SEE CHART	GENERAL MARKET	1 OF 1

DOCUMENT STATUS: P1 | RELEASE DATE: 2020/10/21 19:11:22

FORMAT: IN-ACAD-tb-prod-B
REVISION: B
DATE: 2020/01/14