PART NO.	ENGINEERING NO.	FINISHED LENGTH	POLES	CABLE DIA.
1300069051	105006K13M100	10M [32 FT 9 IN]	5	.40 [10.2]

FACE VIEW-MALE INSERT		
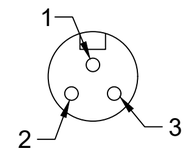	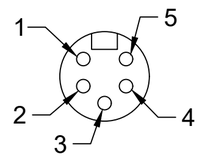	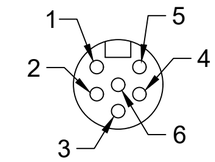
1 GREEN/YELLOW 2 BLACK 3 WHITE	1 WHITE 2 RED 3 GREEN/YELLOW 4 ORANGE 5 BLACK	1 WHITE 2 RED 3 GREEN/YELLOW 4 ORANGE 5 BLACK 6 BLUE

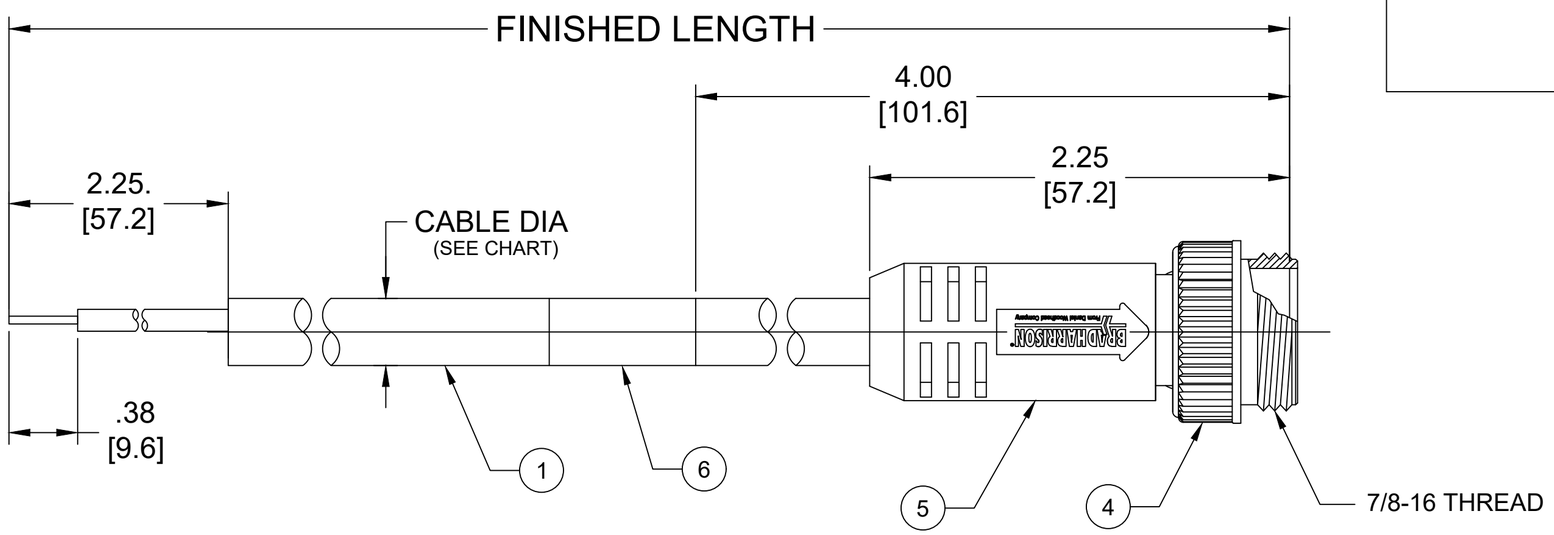

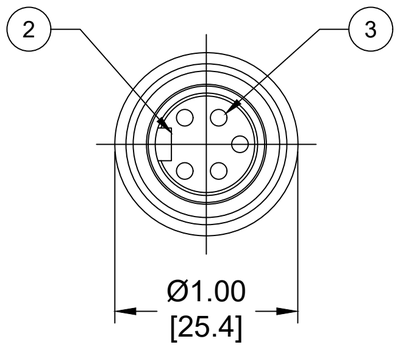

NOTES:
1. MATERIAL: AS NOTED
2. FINISH: AS NOTED
3. ELECTRICAL:
   VOLTAGE - 3P: 500V PER IEC60664
   600V PER UL2238
   CURRENT: 13A
   VOLTAGE - 5P & 6P: 400V PER IEC60664
   600V PER UL2238
   CURRENT - 5P & 6P: 8A
4. TEMP RATING: -20°TO +90°C
5. PROTECTION: IP67 (WHEN MATED)
6. UL LISTED FILE: E152210
7. ALL DIMENSIONS ARE FOR REFERENCE
   UNLESS TOLERANCED OR NOTED OTHERWISE

PART NO. MATRIX
105006K13M010

POLES
(3, 5, 6)

CABLE LENGTH
M005 = 0.5 METER
M010 = 1.0 METER
M100 = 10.0 METER

CABLE LENGTH TOLERANCES
<.3M [1FT]: +19mm-0 [+.75in-0]
.3 - .9M [1 - 3FT]: +44.5mm-0 [+1.75in-0]
.9 - 1.8M [3 - 6FT]: +55.6mm-0 [+2.19in-0]
1.8 - 3.7M [6 - 12FT: +88.9mm-0 [+3.50in-0]
3.7 - 7.3M [12 - 24FT]: +165.1mm-0 [+6.50in-0]
7.3-14.6M [24 - 48FT]: +317.5mm-0 [+12.50in-0]
14.6 - 30.5M [48-100FT]: +622.3mm-0 [+24.50in-0]
OVER 30M [100FT] +2% OF FINISHED LENGTH

MECHANICAL CHARACTERISTICS:

TORSIONAL FLEX TEST	20 MILLION CYCLES PER MIL-C-13777G
BEND FLEX TEST	20 MILLION CYCLES PER MIL-C-13777G
WELD SLAG RESISTANCE	WOODHEAD STANDARD S-300

ITEM	DESCRIPTION	MATERIAL	FINISH
6	WRAP LABEL	VINYL	BLACK/YELLOW
5	OVERMOLD	TPE	YELLOW
4	COUPLING NUT	ZINC DIE-CAST	BLACK E-COAT
3	CONTACT PIN	COPPER ALLOY	GOLD PLATED
2	MALE INSERT (A-SIZE)	TPE	YELLOW
1	CABLE, 16 AWG (HI-FLEX)	TPE JACKET	YELLOW

THIS DRAWING CONTAINS INFORMATION THAT IS PROPRIETARY TO MOLEX ELECTRONIC TECHNOLOGIES, LLC AND SHOULD NOT BE USED WITHOUT WRITTEN PERMISSION

DIMENSION UNITS	SCALE
INCH/MM	NTS

GENERAL TOLERANCES (UNLESS SPECIFIED)

	mm	INCH
4 PLACES	±----	±----
3 PLACES	±----	±----
2 PLACES	±----	±----
1 PLACE	±----	±----
0 PLACES	±----	±----
ANGULAR TOL ± ---- °		

DRAFT WHERE APPLICABLE MUST REMAIN WITHIN DIMENSIONS

CURRENT REV DESC: REMOVED OBSOLETED PART NUMBER AS PER PCN #517562

EC NO: 843773
DRWN: PRANAA 2025/12/11
CHK'D: GGA 2026/01/27
APPR: GGA 2026/01/27

INITIAL REVISION:
DRWN: GGUSTAFS 2013/10/04
APPR: BWOODMAN 2013/11/12

THIRD ANGLE PROJECTION | DRAWING: C-SIZE | SERIES: 130006

molex

MINI-CHANGE CORDSET, A-SIZE
3,5 & 6 POLE, MALE, STRAIGHT, SINGLE KEY, EXT THREAD, 16 AWG HI-FLEX

PRODUCT CUSTOMER DRAWING

DOCUMENT NUMBER	DOC TYPE	DOC PART	REVISION
SD-130006-068	PSD	001	C3

MATERIAL NUMBER	CUSTOMER	SHEET NUMBER
SEE TABLE	GENERAL MARKET	1 OF 1

DOCUMENT STATUS	P1	RELEASE DATE	2026/01/27 12:39:42

FORMAT: IN-ACAD-tb-proc-C
REVISION: C
DATE: 2022/10/04