PART NO.	ENG. NO.	LENGTH
1300062363	104001K12M020	6FT 7IN [2M]
1300062616	104001K12M030	9FT 10IN [3M]
1300069046	104001K12M050	16 FT 5IN [5M]
1300069047	104001K12M100	32FT 10IN [10M]
1300069048	104001K12M200	65 FT 7IN [20M]
1300069049	104001K12M300	98FT 5IN [30M]

C

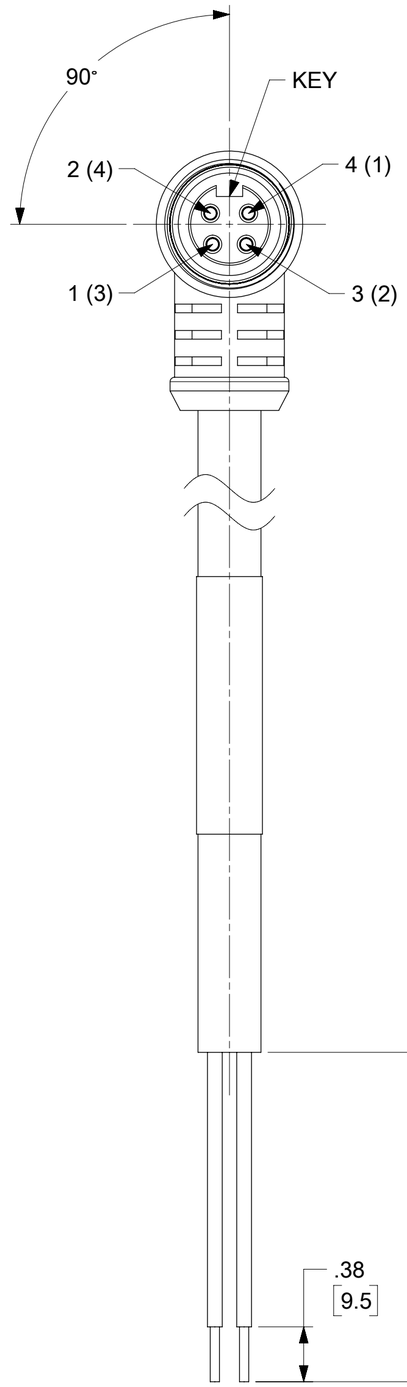

(1) 4 - BLACK
(2) 3 - BLUE
(3) 1 - BROWN
(4) 2 - WHITE

CENELEC 50 004
SAE-J-1738A SHOWN
IN (X) PARENTHESIS

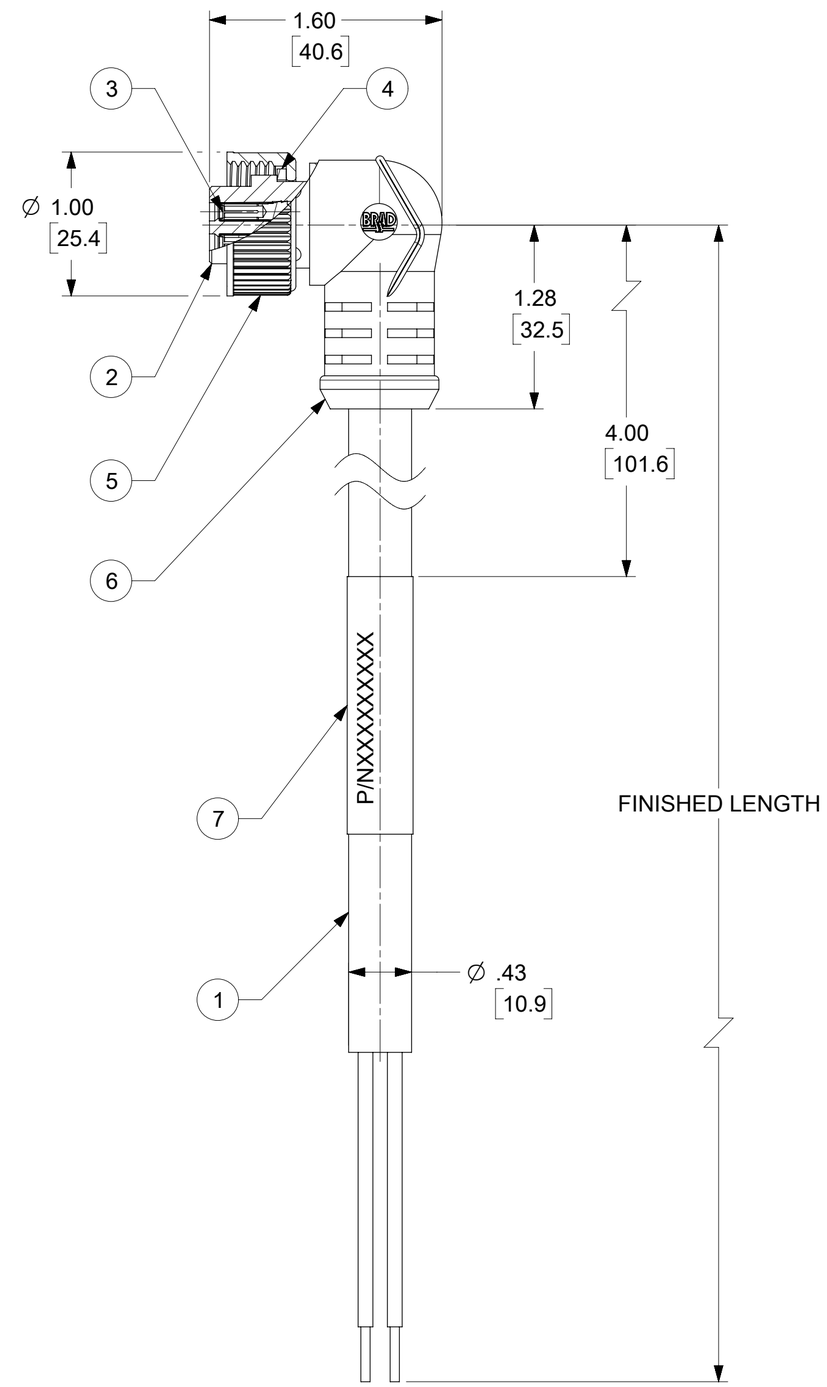

104001K12M020

LENGTH
M001 = .1 METERS
M010 = 1.0 METERS
M100 = 10 METERS

C PART NUMBER LEGEND

NOTES:
1. MATERIAL: AS NOTED
2. FINISH: AS NOTED
3. ELECTRICAL:
   VOLTAGE PER IEC60664: 483V
   600V PER UL 2238
   CURRENT: 10A
C 4. TEMP RATING: -25°TO +90°C
5. PROTECTION: IP67 (WHEN MATED)
6. COUPLING THREAD: 7/8-16 UN
7. UL LISTED FILE: E152210
8. ALL DIMS ARE FOR REFERENCE UNLESS TOLERANCED OR NOTED OTHERWISE

C
CABLE FLEX CHARACTERISTICS

TORSIONAL FLEX TEST	20 MILLION CYCLES PER MIL-C-13777G
BEND FLEX TEST	20 MILLION CYCLES PER MIL-C-13777G
WELD SLAG RESISTANCE	WOODHEAD STANDARD S-300

ITEM	DESCRIPTION	MATERIAL	FINISH
7	WRAP LABEL	VINYL	BLACK/YELLOW
6	OVERMOLD (90 DEG)	TPE	TPE
5	COUPLING	ZINC DIE-CAST	BLACK E-COAT
4	FRICTION RING	NYLON	WHITE
3	CONTACT SOCKET	Cu ALLOY	GOLD PLATED
2	INSERT, 4P, FEMALE	TPE	YELLOW
1	CABLE, 16/4, FLEX	TPE JACKET	YELLOW

C

C
CABLE LENGTH TOLERANCES
<.3M [1FT]: +19mm-0 [+.75in-0]
.3 - .9M [1 - 3FT]: +44.5mm-0 [+1.75in-0]
.9 - 1.8M [3 - 6FT]: +55.6mm-0 [+2.19in-0]
1.8 - 3.7M [6 - 12FT: +88.9mm-0 [+3.50in-0]
3.7 - 7.3M [12 - 24FT]: +165.1mm-0 [+6.50in-0]
7.3-14.6M [24 - 48FT]: +317.5mm-0 [+12.50in-0]
14.6 - 30.5M [48-100FT]: +622.3mm-0 [+24.50in-0]
OVER 30M [100FT] +2% OF FINISHED LENGTH

THIS DRAWING CONTAINS INFORMATION THAT IS PROPRIETARY TO MOLEX ELECTRONIC TECHNOLOGIES, LLC AND SHOULD NOT BE USED WITHOUT WRITTEN PERMISSION

FUNCTIONAL SYMBOLS: FA = 0, FC = 0, FP = 0
DIVISIONAL SYMBOLS

DIMENSION UNITS: INCH/MM
SCALE: 1.25:1
GENERAL TOLERANCES (UNLESS SPECIFIED)
ANGULAR TOL ± °
4 PLACES ±
3 PLACES ±
2 PLACES ±
1 PLACE ±
0 PLACES ±
DRAFT WHERE APPLICABLE MUST REMAIN WITHIN DIMENSIONS

CURRENT REV DESC: REDRAWN TO NX UPDATE NOTES, ADD BOM TABLE, CABLE LENGTH TOLS, P/N LEGEND VOLTAGE WAS 10A, TEMP WAS 105°, ADD FLEX RATING, NEW P/N 1300062616

EC NO: 693841
DRWN: RSTONE 2022/01/26
CHK'D: CCHRASTKA 2022/01/31
APPR: BWOODMAN 2022/02/09

INITIAL REVISION:
DRWN: GGUSTAFS 2013/10/04
APPR: BWOODMAN 2013/11/12

THIRD ANGLE PROJECTION
DRAWING: C-SIZE
SERIES: 130006

molex

MINI CHANGE
4 POLE FEMALE 90 DEG, SINGLE KEY 16 AWG TPE FLEX

PRODUCT CUSTOMER DRAWING

DOCUMENT NUMBER	DOC TYPE	DOC PART	REVISION
SD-130006-064	PSD	001	C

MATERIAL NUMBER	CUSTOMER	SHEET NUMBER
SEE P/N LEGEND	GENERAL MARKET	1 OF 1

DOCUMENT STATUS	P1	RELEASE DATE	2022/02/09 22:39:36

FORMAT: master-tb-prod-C
REVISION: J1
DATE: 2021/05/01