MATERIAL NUMBER	OLD PART NUMBER	FINISHED LENGTH
1300062436	104006K12M030	3M
1300062437	104006K12M040	4M
1300062184	104006K12M020	2M
1300061155	104006K12M003	.3M
1300062183	104006K12M050	5M
1300062376	104006K12M100	10M

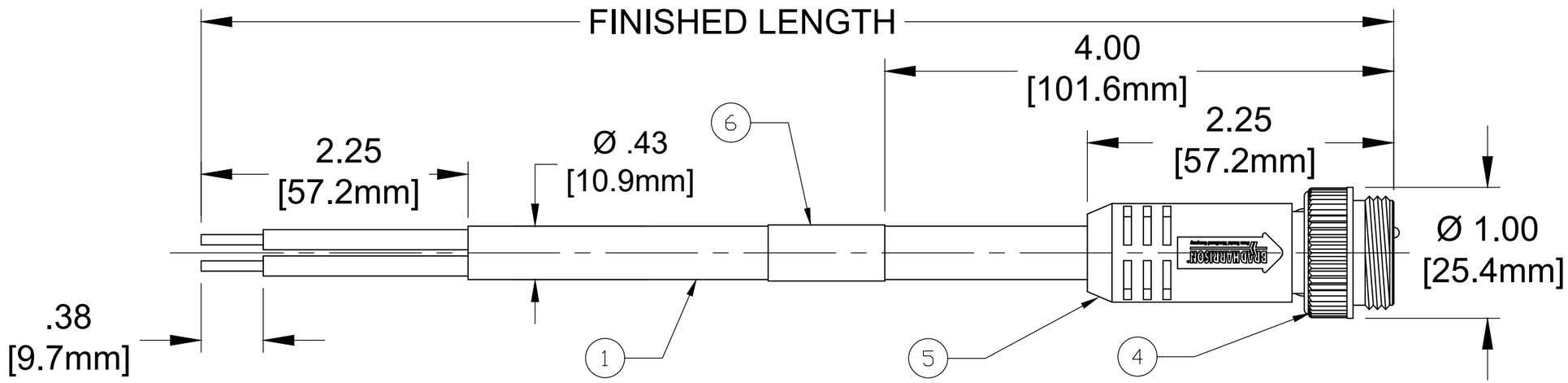

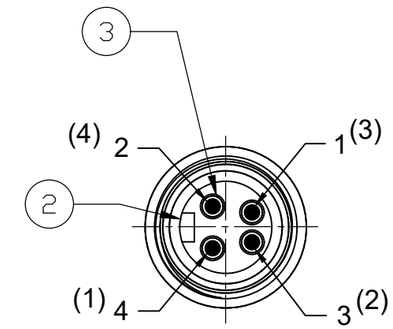

MALE FACE VIEW

104006K12XXXX

16AWG-4
YELLOW TPE

LENGTH
M003 - .3 METER
M010 - 1 METER
M020 - 2 METERS
M100 - 10 METERS

CENELEC EN 50 044 PINOUT SHOWN
(SAE-J-1738A SHOWN IN PARENTHESIS)

BLACK	4 (1)
BLUE	3 (2)
BROWN	1 (3)
WHITE	2 (4)

NOTES:
1. MATERIAL: AS NOTED
2. FINISH: AS NOTED
3. ELECTRICAL:
   VOLTAGE: 483V PER IEC 60664
   600V PER UL 2238
   CURRENT: 10A Ⓒ
4. TEMP RATING: -20°C TO +90°C
5. PROTECTION: IP67 (WHEN MATED)
6. COUPLING THREADS: 7/8-16
7. UL CERTIFICATION: FILE NO. E152210
8. CSA CERTIFICATION: FILE NO. LR6837
9. ALL DIMS ARE FOR REFERENCE UNLESS NOTED OTHERWISE

MECHANICAL CHARACTERISTICS:

TORSIONAL FLEX TEST	20 MILLION CYCLES PER MIL-C-13777G
BEND FLEX TEST	20 MILLION CYCLES PER MIL-C-13777G
WELD SLAG RESISTANCE	WOODHEAD STANDARD S-300

CABLE LENGTH TOLERANCES
<.3M [1FT]: +19mm-0 [+.75in-0]
.3 - .9M [1 - 3FT]: +44.5mm-0 [+1.75in-0]
.9 - 1.8M [3 - 6FT]: +55.6mm-0 [+2.19in-0]
1.8 - 3.7M [6 - 12FT: +88.9mm-0 [+3.50in-0]
3.7 - 7.3M [12 - 24FT]: +165.1mm-0 [+6.50in-0]
7.3-14.6M [24 - 48FT]: +317.5mm-0 [+12.50in-0]
14.6 - 30.5M [48-100FT]: +622.3mm-0 [+24.50in-0]
OVER 30M [100FT] +2% OF FINISHED LENGTH

ITEM	DESCRIPTION	MATERIAL	FINISH
6	WRAP LABEL	VINYL	BLACK/YELLOW
5	OVERMOLD	TPE	YELLOW
4	COUPLING	ZINC DIE-CAST	BLACK
3	CONTACT PIN	COPPER ALLOY	GOLD PLATED
2	MALE INSERT (A-SIZE)	TPE	YELLOW
1	CABLE, 16/4 (HI-FLEX)	TPE JACKET	YELLOW

DOCUMENT STATUS | P1 | RELEASE DATE | 2020/10/21 19:11:23

THIS DRAWING CONTAINS INFORMATION THAT IS PROPRIETARY TO MOLEX ELECTRONIC TECHNOLOGIES, LLC AND SHOULD NOT BE USED WITHOUT WRITTEN PERMISSION

FUNCTIONAL SYMBOLS: FA=0, FC=0, FP=0
DIVISIONAL SYMBOLS

DIMENSION UNITS: INCH/MM
SCALE: NTS

GENERAL TOLERANCES (UNLESS SPECIFIED)

	mm	INCH
4 PLACES	±----	±----
3 PLACES	±----	±----
2 PLACES	±----	±----
1 PLACE	±----	±----
0 PLACES	±----	±----
ANGULAR TOL	±---- °	

DRAFT WHERE APPLICABLE MUST REMAIN WITHIN DIMENSIONS

CURRENT REV DESC: UPDATED AMPERAGE AND TEMPLATE

EC NO: 646474
DRWN: ALEON01 2020/10/14
CHK'D: CCHRASTKA 2020/10/19
APPR: BWOODMAN 2020/10/21

INITIAL REVISION:
DRWN: GGUSTAFS 2016/03/08
APPR: BWOODMAN 2016/03/29

molex

MINI-CHANGE 4 POLE
MALE STR #16-4 TPE CABLE YELLOW

PRODUCT CUSTOMER DRAWING

DOCUMENT NUMBER	DOC TYPE	DOC PART	REVISION
SD-130006-073	PSD	001	C

THIRD ANGLE PROJECTION | DRAWING: B-SIZE | SERIES: 130006 | MATERIAL NUMBER: SEE CHART | CUSTOMER: GENERAL MARKET | SHEET NUMBER: 1 OF 1

FORMAT: IN-ACAD-tb-prod-B
REVISION: B
DATE: 2020/01/14