CABLE LENGTH TOLERANCES
>.3M [1FT]: +19mm-0 [+.75in-0]
.3 - .9M [1 - 3FT]: +44.5mm-0 [+1.75in-0]
.9 - 1.8M [3 - 6FT]: +55.6mm-0 [+2.19in-0]
1.8 - 3.7M [6 - 12FT: +88.9mm-0 [+3.50in-0]
3.7 - 7.3M [12 - 24FT]: +165.1mm-0 [+6.50in-0]
7.3-14.6M [24 - 48FT]: +317.5mm-0 [+12.50in-0]
14.6 - 30.5M [48-100FT]: +622.3mm-0 [+24.50in-0]
OVER 30M [100FT] +2% OF FINISHED LENGTH

PART NUMBER LEGEND

604000C05F150

FINISHED LENGTH:
F010= 1 FOOT
F100= 10 FEET
M005= 0.5 METER
M010= 1 METER
M100= 10 METER

MATERIAL NO.	ENGINEERING NO.	FINISHED LENGTH
1300000073	32637	3.0 FT [0.9M]
1300000074	32638	6.0 FT. [1.8M]
1300000076	32639	12.0 FT. [3.7M]
1300000189	604000C05F150	15.0 FT. [4.6M]

REF. FOR 2 & 3P ASSY'S SEE SD-130000-004

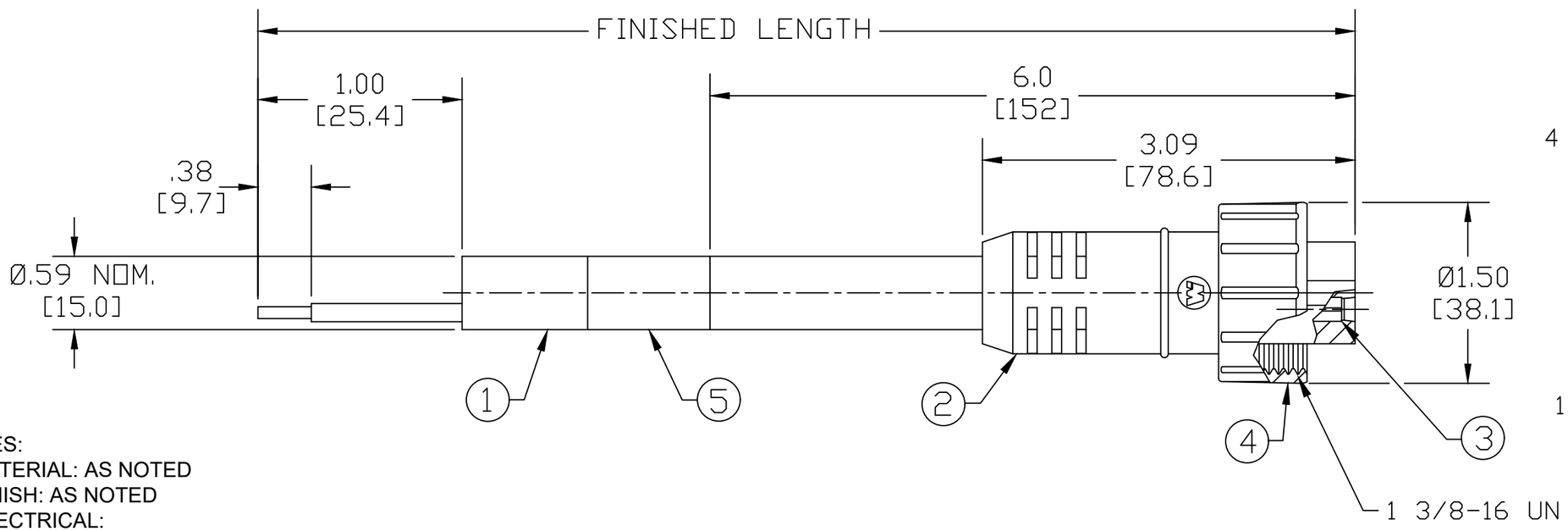

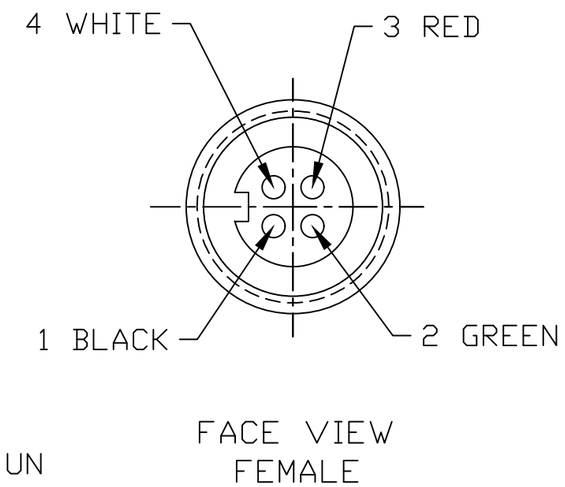

NOTES:
1. MATERIAL: AS NOTED
2. FINISH: AS NOTED
3. ELECTRICAL:
   VOLTAGE: 600V AC/DC
   CURRENT:15A
4. TEMP RATING: -25°C TO +90°C
5. PROTECTION: IP67 (WHEN MATED)
6. COUPLING THREAD: AS NOTED
7. ALL DIMS ARE FOR REFERENCE UNLESS TOLERENCED OR NOTED OTHERWISE

ITEM	COMPONENT	MATERIAL	FINISH
5	WRAP LABEL	VINYL	BLACK/YELLOW
4	COUPLING NUT	THERMOPLASTIC	BLACK
3	CONTACT SOCKET	COPPER ALLOY	UN-PLATED
2	OVERMOLD	RUBBER	YELLOW
1	CABLE-14 AWG SOOW	CPE JACKET	YELLOW

DOCUMENT STATUS	P1	RELEASE DATE	2025/08/19 10:06:41

FORMAT: IN-ACAD-tb-prod-B
REVISION: A1
DATE: 2019/06/12

THIS DRAWING CONTAINS INFORMATION THAT IS PROPRIETARY TO MOLEX ELECTRONIC TECHNOLOGIES, LLC AND SHOULD NOT BE USED WITHOUT WRITTEN PERMISSION

FUNCTIONAL SYMBOLS: FA=0, FC=0, FP=0
DIVISIONAL SYMBOLS

DIMENSION UNITS: INCH/MM
SCALE: 1:1

GENERAL TOLERANCES (UNLESS SPECIFIED)

	mm	INCH
4 PLACES	±----	±----
3 PLACES	±----	±----
2 PLACES	±----	±0.01
1 PLACE	±0.3	±----
0 PLACES	±----	±----
ANGULAR TOL	± 2.0 °	

DRAFT WHERE APPLICABLE MUST REMAIN WITHIN DIMENSIONS

CURRENT REV DESC: REMOVED OBSOLETED PART NUMBERS AS PER PCN#516986

EC NO: 831193
DRWN: SAMPRS 2025/08/05
CHK'D: GGA 2025/08/19
APPR: GGA 2025/08/19

INITIAL REVISION:
DRWN: RSTONE 2019/09/24
APPR: BWOODMAN 2019/10/09

THIRD ANGLE PROJECTION | DRAWING: B-SIZE | SERIES: 130000

molex

QUICK CHANGE CABLE ASSY
4P FEMALE, 14 AWG

PRODUCT CUSTOMER DRAWING

DOCUMENT NUMBER	DOC TYPE	DOC PART	REVISION
1300000009	PSD	000	A1

MATERIAL NUMBER	CUSTOMER	SHEET NUMBER
SEE TABLE	GENERAL MARKET	1 OF 1