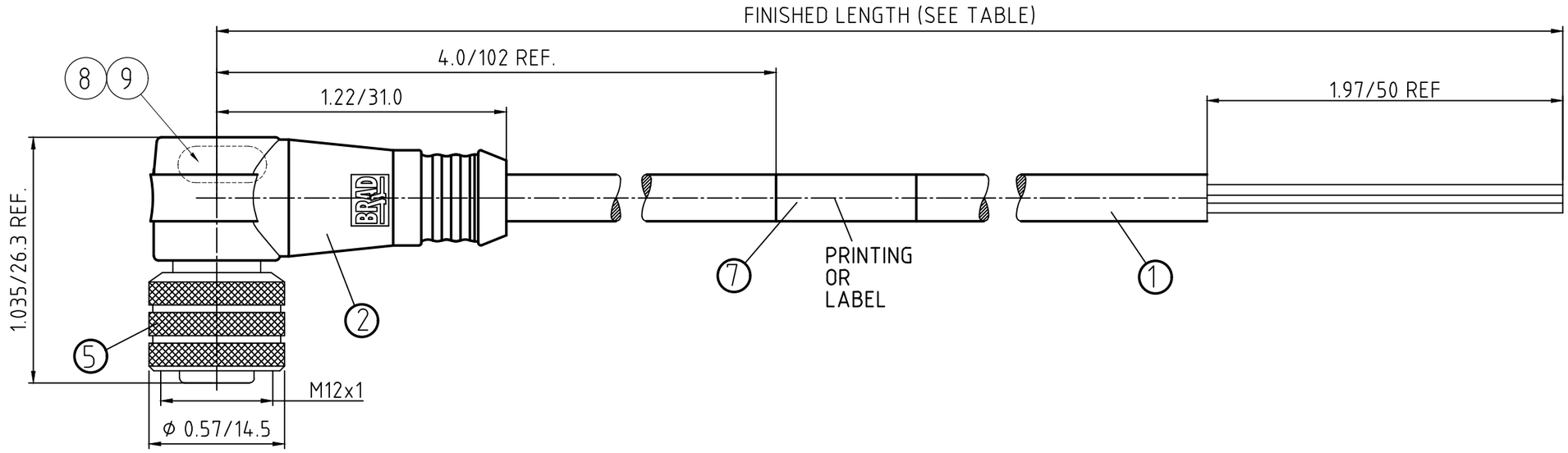

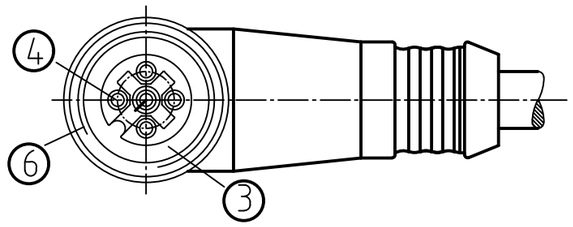

POL	MATERIAL NUMBER	ENGINEERING NUMBER	FINISHED LENGTH
4	1200675231	8040P1B03M020	6.56' +3.5" -0 [2.0M +89 -0]

4-POLE

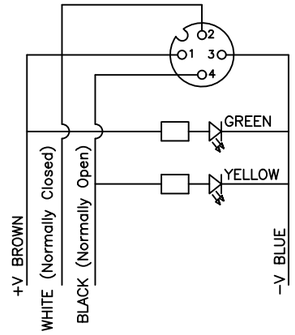

FEMALE FACE VIEW

4-POLE

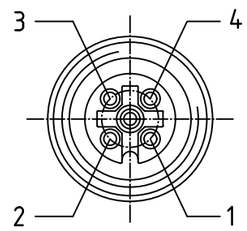

WIRING DIAGRAM

1 BROWN
2 WHITE
3 BLUE
4 BLACK

CONNECTOR SPECIFICATION:

VOLTAGE RATING	10 TO 30VDC
AMPERAGE RATING	max. 4 AMPS
PROTECTION	IP67
OPERATING TEMPERATURE	FLEXING: -5°C TO +90°C STATIC: -30°C TO +90°C

ITEM	COMPONENT	MATERIAL	FINISH
9	LED		GREEN
8	LED		YELLOW
7	LABLE	MYLAR	BLACK/YELLOW
6	O-RING	VITON	RED
5	COUPLER	BRASS	NICKEL PLATED
4	PIN CONTACT	COPPER ALLOY	GOLD OVER NICKEL
3	INSERT	PUR	BLACK
2	OVERMOLD	POLYURETHANE (PUR)	TRANSP.
1	CABLE- 22/3-4 (COPPER STRANDING) 3/4 CONDUCT. 300V	JACKET: PUR	BLACK

DOCUMENT STATUS	P1	RELEASE DATE	2025/10/16 19:09:17

THIS DRAWING CONTAINS INFORMATION THAT IS PROPRIETARY TO MOLEX ELECTRONIC TECHNOLOGIES, LLC AND SHOULD NOT BE USED WITHOUT WRITTEN PERMISSION

DIMENSION UNITS: IN/MM
SCALE: 2:1

GENERAL TOLERANCES (UNLESS SPECIFIED)

	mm	INCH
4 PLACES	±----	±----
3 PLACES	±----	±----
2 PLACES	±----	±0.1
1 PLACE	±0.3	±----
0 PLACES	±----	±----
ANGULAR TOL ± ---- °		

DRAFT WHERE APPLICABLE MUST REMAIN WITHIN DIMENSIONS

CURRENT REV DESC: REMOVED OBSOLETED PART NUMBER AS PER PCN #517104

EC NO: 836953
DRWN: PRANAA 2025/10/09
CHK'D: GGA 2025/10/16
APPR: GGA 2025/10/16

INITIAL REVISION:
DRWN: BBRAUCH 2010/02/03
APPR: NSTAUDIG 2010/02/25

THIRD ANGLE PROJECTION | DRAWING: A3-SIZE | SERIES: 120067

molex

MIC 3-4P FE 90 PNP PUR
22/3-4 BLACK PUR CABLE

PRODUCT CUSTOMER DRAWING

DOCUMENT NUMBER	DOC TYPE	DOC PART	REVISION
SD-120067-010	PSD	001	A

MATERIAL NUMBER	CUSTOMER	SHEET NUMBER
SEE TABLE	GENERAL MARKET	1 OF 1

FORMAT: ACAD-lb-prod-A3
REVISION: C
DATE: 2022/10/04